LN Series

Chillers and Outdoor Mechanical Rooms

AHRI CERTIFIED®
www.ahridirectory.org
Air-Cooled Water Chilling Packages
AHRI Standards 550/590 and 551/591

Installation, Operation, & Maintenance

INTERTEK ETL CM C US LISTED

ENVIRONMENTALLY FRIENDLY REFRIGERANT AAON 410A

⚠ WARNING

FIRE OR EXPLOSION HAZARD

Failure to follow safety warnings exactly could result in serious injury, death or property damage.

Be sure to read and understand the installation, operation and service instructions in this manual.

Improper installation, adjustment, alteration, service or maintenance can cause serious injury, death or property damage.

A copy of this IOM should be kept with the unit.

⚠ WARNING

Do not store gasoline or other flammable vapors and liquids in the vicinity of this or any other appliance.

WHAT TO DO IF YOU SMELL GAS

- Do not try to light any appliance.
- Do not touch any electrical switch; do not use any phone in your building.
- Leave the building immediately.
- Immediately call you gas supplier from a phone remote from the building. Follow the gas supplier's instructions.
- If you cannot reach your gas supplier call the fire department.

Startup and service must be performed by a Factory Trained Service Technician.

Table of Contents

Index of Tables and Figures

Tables:

Figures:

V28980 · Rev. B · 190515

AAON® LN Series Features and Options Introduction

Energy Efficiency
- High Efficiency Air-Cooled Microchannel Condenser
- Staged or Tandem VFD Controlled Variable Speed R-410A Scroll Compressors
- Two Inch Double Wall Rigid Polyurethane Foam Panel Construction
- VFD Controlled Pumping Package
- Glycol Chillers
- Constant or Variable Flow Factory Installed Pumping System
- VFD Controlled Condenser Fan Head Pressure Control
- ECM Low Sound Condenser Fan Head Pressure Control
- Factory Installed EXVs

Outdoor Mechanical Room
- Lighted Service Compartment
- Shell and Tube or Brazed Plate Heat Evaporators
- Factory Engineered Primary Pumping Package

Safety
- Phase and Brownout Protection

Environmentally Friendly
- R-410A Refrigerant

Installation and Maintenance
- Run Test Report and Installation Manuals Included in Controls Compartment
- Color Coded Wiring Diagrams
- Sight Glass
- Compressors include Rubber Isolation Mounts
- Vestibule Electric Heating in Service Compartment
- Compressor Isolation Valves
- Convenience Outlet
- Non-fused Disconnect
- Thermometers & Pressure Gauges

System Integration
- Complete System with AAON Chilled Water Air Handling Units
- Single Point Power
- Glycol Chillers
- Grooved End Water Piping Connections
- Constant or Variable Flow Factory Installed Pumping System
- BMS Connectivity

Extended Life
- 2,500 Hour Salt Spray Tested Exterior Corrosion Paint
- Optional 5 Year Non-Prorated Compressor Warranty
- Polymer E-Coated Condenser Coils
- Exterior Cabinet Paint Exceeds 2,500 Salt Spray Test
- Condenser Coil Guards

Safety

Attention should be paid to the following statements:

NOTE - Notes are intended to clarify the unit installation, operation and maintenance.

⚠ **CAUTION** - Caution statements are given to prevent actions that may result in equipment damage, property damage, or personal injury.

⚠ **WARNING** - Warning statements are given to prevent actions that could result in equipment damage, property damage, personal injury or death.

⚠ **DANGER** - Danger statements are given to prevent actions that will result in equipment damage, property damage, severe personal injury or death.

⚠ WARNING

ELECTRIC SHOCK, FIRE OR EXPLOSION HAZARD

Failure to follow safety warnings exactly could result in dangerous operation, serious injury, death or property damage.

Improper servicing could result in dangerous operation, serious injury, death, or property damage.

- Before servicing, disconnect all electrical power to the furnace. More than one disconnect may be provided.
- When servicing controls, label all wires prior to disconnecting. Reconnect wires correctly.
- Verify proper operation after servicing. Secure all doors with key-lock or nut and bolt.

⚠ WARNING

QUALIFIED INSTALLER

Improper installation, adjustment, alteration, service or maintenance can cause property damage, personal injury or loss of life. Startup and service must be performed by a Factory Trained Service Technician. A copy of this IOM should be kept with the unit.

⚠ CAUTION

WHAT TO DO IF YOU SMELL GAS

- Do not try to turn on unit.
- Shut off main gas supply.
- Do not touch any electric switch.
- Do not use any phone in the building.
- Never test for gas leaks with an open flame.
- Use a gas detection soap solution and check all gas connections and shut off valves.

⚠ WARNING

FIRE, EXPLOSION OR CARBON MONOXIDE POISONING HAZARD

Failure to replace proper controls could result in fire, explosion or carbon monoxide poisoning. Failure to follow safety warnings exactly could result in serious injury, death or property damage. Do not store or use gasoline or other flammable vapors and liquids in the vicinity of this appliance.

⚠ WARNING

Electric shock hazard. Before servicing, shut off all electrical power to the unit, including remote disconnects, to avoid shock hazard or injury from rotating parts. Follow proper Lockout-Tagout procedures.

⚠ WARNING

During installation, testing, servicing, and troubleshooting of the equipment it may be necessary to work with live electrical components. Only a qualified licensed electrician or individual properly trained in handling live electrical components shall perform these tasks.

Standard NFPA-70E, an OSHA regulation requiring an Arc Flash Boundary to be field established and marked for identification of where appropriate Personal Protective Equipment (PPE) be worn, should be followed.

⚠ WARNING

GROUNDING REQUIRED

All field installed wiring must be completed by qualified personnel. Field installed wiring must comply with NEC/CEC, local and state electrical code requirements. Failure to follow code requirements could result in serious injury or death. Provide proper unit ground in accordance with these code requirements.

⚠ WARNING

VARIABLE FREQUENCY DRIVES

Do not leave VFDs unattended in hand mode or manual bypass. Damage to personnel or equipment can occur if left unattended. When in hand mode or manual bypass mode VFDs will not respond to controls or alarms.

⚠ CAUTION

Electric motor over-current protection and overload protection may be a function of the Variable Frequency Drive to which the motors are wired. Never defeat the VFD motor overload feature. The overload ampere setting must not exceed 115% of the electric motors FLA rating as shown on the motor nameplate.

WARNING

UNIT HANDLING

To prevent injury or death lifting equipment capacity shall exceed unit weight by an adequate safety factor. Always test-lift unit not more than 24 inches high to verify proper center of gravity lift point to avoid unit damage, injury or death.

CAUTION

Door compartments containing hazardous voltage or rotating parts are equipped with door latches to allow locks. Door latch are shipped with nut and bolts requiring tooled access. If you do not replace the shipping hardware with a pad lock always re-install the nut & bolt after closing the door.

WARNING

Do not use oxygen, acetylene or air in place of refrigerant and dry nitrogen for leak testing. A violent explosion may result causing injury or death.

CAUTION

PVC (Polyvinyl Chloride) and CPVC (Chlorinated Polyvinyl Chloride) are vulnerable to attack by certain chemicals. Polyolester (POE) oils used with R-410A and other refrigerants, even in trace amounts, in a PVC or CPVC piping system will result in stress cracking of the piping and fittings and complete piping system failure.

CAUTION

Rotation must be checked on all MOTORS AND COMPRESSORS of 3 phase units at startup by a qualified service technician. Scroll compressors are directional and can be damaged if rotated in the wrong direction. Compressor rotation must be checked using suction and discharge gauges. Fan motor rotation should be checked for proper operation. Alterations should only be made at the unit power connection

CAUTION

To prevent damage to the unit, do not use acidic chemical coil cleaners. Use alkaline chemical coil cleaners with a pH value of 5-9, after mixing, without first using an aluminum corrosion inhibitor in the cleaning solution.

⚠ WARNING

Some chemical coil cleaning compounds are caustic or toxic. Use these substances only in accordance with the manufacturer's usage instructions. Failure to follow instructions may result in equipment damage, injury or death.

⚠ CAUTION

Do not clean DX refrigerant coils with hot water or steam. The use of hot water or steam on refrigerant coils will cause high pressure inside the coil tubing and damage to the coil.

⚠ CAUTION

Polyolester (POE) and Polyvinylether (PVE) oils are two types of lubricants used in hydrofluorocarbon (HFC) refrigeration systems. Refer to the compressor label for the proper compressor lubricant type.

⚠ WARNING

COMPRESSOR CYCLING

3 MINUTE MINIMUM OFF TIME
To prevent motor overheating compressors must cycle off for a minimum of 3 minutes.

3 MINUTE MINIMUM ON TIME
To maintain the proper oil level compressors must cycle on for a minimum of 3 minutes.

The cycle rate must not exceed 6 starts per hour.

1. Startup and service must be performed by a Factory Trained Service Technician

2. The unit is for outdoor use only. See General Information section for more information.

3. Every unit has a unique equipment nameplate with electrical, operational, and unit clearance specifications. Always refer to the unit nameplate for specific ratings unique to the model you have purchased.

4. READ THE ENTIRE INSTALLATION, OPERATION AND MAINTENANCE MANUAL. OTHER IMPORTANT SAFETY PRECAUTIONS ARE PROVIDED THROUGHOUT THIS MANUAL.

5. Keep this manual and all literature safeguarded near or on the unit.

LN Series Feature String Nomenclature

Model Options : Unit Feature Options

GEN	MJREV	SIZE	SERIES	MNREV	VLT	A1	A2	A3	A4	A5	B1	B2	B3	B4	1	2	3A 3B 3C 3D	4A 4B 4C 4D	5A 5B 5C	6 7	8A 8B 8C	9	10A 10B 10C 10D
LN	A	140	C	A	3	F	A	C	0	E	0	0	0	0	A	0	0000	0000	0000	00	000	0	0E00

11	12	13	14	15	16	17	18	19	20	21	22	23	24	25	26A	26B	26C	26D	26E	26F	27	28	29	30	31	32	33	34	35
0	0	0	0	0	0	A	0	0	0	0	0	0	0	0	0	0	0	0	0	0	0	0	0	0	0	0	0	0	B

MODEL OPTIONS

SERIES AND GENERATION
LN

MAJOR REVISION
A

UNIT SIZE
045 = 45 ton Capacity
055 = 55 ton Capacity
060 = 60 ton Capacity
075 = 75 ton Capacity
095 = 95 ton Capacity
105 = 105 ton Capacity
120 = 120 ton Capacity
140 = 140 ton Capacity

SERIES
A = 45-60 ton units
B = 75 ton unit
C = 95-140 ton units

MINOR REVISION
A

VOLTAGE
2 = 230V/3Φ/60Hz
3 = 460V/3Φ/60Hz
4 = 575V/3Φ/60Hz
8 = 208V/3Φ/60Hz

A1: COMPRESSOR STYLE
F = R-410A Tandem VFD Compatible Scroll Compressor

A2: CONDENSER STYLE
A = Air-Cooled Microchannel Condenser

A3: EVAPORATOR CONFIGURATION
A = Standard Brazed Plate Constant Flow
B = Oversized Brazed Plate Constant Flow
C = Standard Shell & Tube Constant Flow
D = Oversized Shell & Tube Constant Flow

A4: COATING
0 = Standard
E = Polymer E-Coated Condenser Coil

A5: STAGING
0 = Staged Compressors
E = All Circuits with Variable Capacity Compressors - 2 Circuits
G = Half Circuits with Variable Capacity Compressors - 2 Circuits

B1: BLANK
0 = Standard

B2: BLANK
0 = Standard

B3: BLANK
0 = Standard

B4: BLANK
0 = Standard

UNIT FEATURE OPTIONS

1: UNIT ORIENTATION
A = Standard Access Left Water Connections
B = Standard Access Right Water Connections
C = Standard Access Bottom Water Connections

2: PUMPING STYLE
0 = No Pumps
B = Constant Flow Primary Pumping System - Large Pipe Size
D = Variable Flow Primary Pumping System - Large Pipe Size

LN Series Feature String Nomenclature

Model Options : Unit Feature Options

GEN	MIREV	SIZE	SERIES	MNREV	VLT	A1	A2	A3	A4	A5	B1	B2	B3	B4	1	2	**3A**	**3B**	**3C**	3D	4A	4B	4C	4D	5A	5B	5C	5D	6	7	8A	8B	8C	9	10A	10B	10C	10D
LN	A –	140 –	C –	A –	3 –	F	A	C	0	E –	0	0	0	0 :	A	0 –	**0**	**0**	**0**	0 –	0	0	0	0 –	0	0	0	0 –	0	0 –	0	0	0 –	0 –	0	E	0	0 –

11	12	13	14	15	16	17	18	19	20	21	22	23	24	25	26A	26B	26C	26D	26E	26F	27	28	29	30	31	32	33	34	35
0	0	0	0	0 –	0	A	0	0	0 –	0	0	0	0	0 –	0	0	0	0	0	0 –	0	0	0	0	0 –	0	0	0	B

3A: BUILDING PUMP CONFIGURATION

0 = No Building Pumps
A = 1 Pump + High Eff Motor
B = 1 Dual Pump + High Eff Motors
D = 1 Pump + VFD + High Eff Motor
E = 1 Dual Pump + 2 VFD's + High Eff Motors
K = 1 Pump + Field Installed VFD + High Eff Motor
L = 1 Dual Pump + 2 Field Installed VFD's + High Eff Motors

3B: BUILDING PUMP SERIES AND RPM

0 = No Building Pumps
A = 4360 (1,170 nominal rpm)
B = 4360 (1,760 nominal rpm)
C = 4360 (3,520 nominal rpm)
D = 4380 (1,170 nominal rpm)
E = 4380 (1,760 nominal rpm)
F = 4380 (3,520 nominal rpm)
K = 4382 (1,170 nominal rpm)
L = 4382 (1,760 nominal rpm)
M = 4382 (3,520 nominal rpm)

3C: PUMP SIZE

0 = No Building Pumps
A = 1.5B
B = 2B
C = 2D
D = 3D
E = 1.5x1.5x6
F = 2x2x6
G = 3x3x6
H = 4x4x6
J = 6x6x6
K = 1.5x1.5x8
L = 2x2x8
M = 3x3x8
N = 4x4x8
P= 5x5x8
Q = 6x6x8
R = 8x8x8
S = 2x2x10
T = 3x3x10
U = 4x4x10
V = 6x6x10
W = 8x8x10
Y = 4x4x11.5
Z = 5x5x11.5
1 = 6x6x11.5
2 = 8x8x11.5
3 = 4x4x13
4 = 6x6x13
5 = 8x8x13

LN Series Feature String Nomenclature

Model Options : Unit Feature Options

GEN	MJREV	SIZE	SERIES	MNREV	VLT	A1	A2	A3	A4	A5	B1	B2	B3	B4	1	2	3A	3B	3C	**3D**	**4A**	**4B**	**4C**	**4D**	**5A**	**5B**	**5C**	**5D**	**6**	**7**	**8A**	**8B**	**8C**	**9**	**10A**	**10B**	**10C**	10D
LN	A –	140 –	C –	A –	3 –	F	A	C	0	E –	0	0	0	0	:	A	0 –	0	0	0	**0 –**	**0**	**0**	**0 –**	**0**	**0**	**0**	**0 –**	**0**	**0 –**	**0**	**0**	**0 –**	**0 –**	**0**	**E**	**0**	0 -

11	12	13	14	15	16	17	18	19	20	21	22	23	24	25	26A	26B	26C	26D	26E	26F	27	28	29	30	31	32	33	34	35
0	0	0	0	0 –	0	A	0	0	0 –	0	0	0	0	0 –	0	0	0	0	0	0 –	0	0	0	0	0 –	0	0	0	B

3D: BUILDING PUMP MOTOR SIZE
0 = No Building Pumps
C = 1 hp
E = 2 hp
F = 3 hp
G = 5 hp
H = 7.5 hp
J = 10 hp
K = 15 hp
L = 20 hp
M = 25 hp
N = 30 hp
P = 40 hp
Q = 50 hp

4A: BLANK
0 = Standard

4B: BLANK
0 = Standard

4C: BLANK
0 = Standard

4D: BLANK
0 = Standard

5A: BLANK
0 = Standard

5B: BLANK
0 = Standard

5C: BLANK
0 = Standard

5D: BLANK
0 = Standard

6: REFRIGERATION OPTIONS
0 = Standard
A = Hot Gas Bypass on Non-Variable Capacity Circuits
B = Hot Gas Bypass - All Circuits

7: REFRIGERATION ACCESSORIES
0 = Standard
A = Sight Glass
B = Compressor Isolation Valves
C = Option A + B

8A: UNIT DISCONNECT TYPE
0 = Standard Single Point Power Block
A = Single Point Power Non-fused Disconnect

8B: DISCONNECT SIZE
0 = Power Block
N = 100 amps
R = 150 amps
U = 225 amps
V = 250 amps
Z = 400 amps
3 = 600 amps
5 = 800 amps
7 = 1200 amps

8C: BLANK
0 = Standard

9: ACCESSORIES
0 = Standard
B = Phase & Brown Out Protection

10A: UNIT CONTROL SEQUENCE
0 = Standard Controls

10B: UNIT CONTROL SUPPLIER
E = MCS Controls

10C: CONTROL SUPPLIER OPTIONS
0 = Standard
A = Touchscreen Interface
C = Modem
G = Option A + C

LN Series Feature String Nomenclature

Model Options : Unit Feature Options

GEN	MJREV	SIZE	SERIES	MNREV	VLT	A1	A2	A3	A4	A5	B1	B2	B3	B4	1	2	3A	3B	3C	3D	4A	4B	4C	4D	5A	5B	5C	5D	6	7	8A	8B	8C	9	10A	10B	10C	**10D**
LN	A –	140 –	C –	A –	3 –	F	A	C	0	E –	0	0	0	0 :	A	0 –	0	0	0	0 –	0	0	0	0 –	0	0	0	0 –	0	0 –	0	0	0 –	0 –	0	E	0	**0** –

0	**0**	**0**	**0**	**0**	–	**0**	**A**	**0**	**0**	**0**	–	**0**	**0**	**0**	**0**	**0**	–	**0**	**0**	0	0	0	0	–	0	0	0	0	0	–	0	0	0	0	0	–	0	0	0	B
11	**12**	**13**	**14**	**15**		**16**	**17**	**18**	**19**	**20**		**21**	**22**	**23**	**24**	**25**		**26A**	**26B**	26C	26D	26E	26F		27	28	29	30	31		32	33	34	35					

10D: BMS CONNECTION & DIAGNOSTICS
0 = None
A = BACnet IP
B = BACnet MSTP
C = Modbus IP
D = Modbus RTU
E = Lontalk
H = No BMS Connection with Diagnostics
J = BACnet IP with Diagnostics
K = BACnet MSTP with Diagnostics
L = Modbus IP with Diagnostics
M = Modbus RTU with Diagnostics
N = Lontalk with Diagnostics

11: BLANK
0 = Standard

12: VESTIBULE ACCESSORIES
0 = Standard
C = Vestibule Heating (Electric)

13: MAINTENANCE ACCESSORIES
0 = Standard
A = 115VAC Convenience Outlet Factory Wired
B = 115VAC Convenience Outlet Field Wired
C = Service Lights
F = Options A + C
J = Options B + C

14: BLANK
0 = Standard

15: CODE OPTIONS
0 = Standard ETL U.S.A. Listing
A = Chicago Code
B = ETL U.S.A. + Canada Listing

16: SHIPPING SPLITS
0 = One Piece Unit

17: AIR-COOLED CHILLER ACCESSORIES
H = Cond Coil Guards + Three Phase Cond Fan Motor + Fan Cycling- 35°F Low Ambient
J = Cond Coil Guards + VFD Cond Fan Head Pressure Control - 0°F Low Ambient
S = Cond Coil Guards + Low Sound ECM Cond Fans – Head Pressure Control (0°F Low Ambient)

18: BLANK
0 = Standard

19: BLANK
0 = Standard

20: BLANK
0 = Standard

21: BLANK
0 = Standard

22: BLANK
0 = Standard

23: BLANK
0 = Standard

24: CHILLER ACCESSORIES 1
0 = Standard
A = Glycol Chiller
C = Thermometers & Pressure Gauges
G = Option A + C

25: BLANK
0 = Standard

26A: BLANK
0 = Standard

26B: BLANK
0 = Standard

LN Series Feature String Nomenclature

Model Options : Unit Feature Options

GEN	MJREV	SIZE	SERIES	MNREV	VLT	A1	A2	A3	A4	A5	B1	B2	B3	B4	1	2	3A	3B	3C	3D	4A	4B	4C	4D	5A	5B	5C	5D	6	7	8A	8B	8C	9	10A	10B	10C	10D
LN	A –	140 –	C –	A –	3 –	F	A	C	0	E –	0	0	0	0 :	A	0 –	0	0	0	0 –	0	0	0	0 –	0	0	0	0 –	0	0 –	0	0	0 –	0 –	0	E	0	0 –

11	12	13	14	15		16	17	18	19	20		21	22	23	24	25		26A	26B	**26C**	**26D**	**26E**		**27**	**28**	**29**	**30**	**31**		**32**	**33**	**34**	**35**
0	0	0	0	0 –	0	A	0	0	0 –	0	0	0	0	0 –	0	0	0	**0**	**0**	**0** –	**0**	**0**	**0**	**0** –	**0**	**0**	**0**	**0** –	**0**	**0**	**B**

26C: BLANK
0 = Standard

26D: BLANK
0 = Standard

26E: BLANK
0 = Standard

26F: BLANK
0 = Standard

27: BLANK
0 = Standard

28: BLANK
0 = Standard

29: BLANK
0 = Standard

30: BLANK
0 = Standard

31: BLANK
0 = Standard

32: BLANK
0 = Standard

33: WARRANTY
0 = Standard Warranty
D = Compressor Warranty Years 2-5

34: CABINET MATERIAL
0 = Standard - Double Wall + R-13 Foam Insulation

35: PAINT & SPECIAL PRICING AUTHORIZATIONS
B = Premium AAON Gray Paint Exterior
E = Premium AAON Gray Paint Exterior + Shrink Wrap
X = Special Pricing Authorization + Premium AAON Gray Paint Exterior
1 = SPA + Premium AAON Gray Paint Exterior + Shrink Wrap
4 = Special Pricing Authorization + Special Exterior Paint Color
7 = SPA + Special Exterior Paint Color + Shrink Wrap

General Information

AAON LN Series chillers are complete self-contained liquid chilling units. They are assembled, wired, charged and run-tested. Models are available for air-cooled applications. Chiller primary pumping packages are available as optional features.

⚠ WARNING

Improper installation, adjustment, alteration, service or maintenance can cause property damage, personal injury or loss of life. Startup and service must be performed by a Factory Trained Service Technician.

Codes and Ordinances
LN Series units have been tested and certified, by ETL, in accordance with UL Safety Standard 1995/CSA C22.2 No. 236.

System should be sized in accordance with the American Society of Heating, Refrigeration and Air Conditioning Engineers Handbook.

Installation of LN Series units must conform to the ICC standards of the International Mechanical Code, the International Building Code, and local building, plumbing and waste water codes. All appliances must be electrically grounded in accordance with local codes, or in the absence of local codes, the current National Electric Code, ANSI/NFPA 70 or the current Canadian Electrical Code CSA C22.1.

⚠ CAUTION

The Clean Air Act of 1990 bans the intentional venting of refrigerant as of July 1, 1992. Approved methods of recovery, recycling, or reclaiming must be followed.

⚠ WARNING

Coils and sheet metal surfaces present sharp edges and care must be taken when working with equipment.

⚠ WARNING

Failure to observe the following instructions will result in premature failure of your system and possible voiding of the warranty.

Receiving Unit
When received, the unit should be checked for damage that might have occurred in transit. If damage is found it should be noted on the carrier's Freight Bill. A request for inspection by carrier's agent should be made in writing at once. Nameplate should be checked to ensure the correct model sizes and voltages have been received to match the job requirements.

If repairs must be made to damaged goods, then the factory should be notified before any repair action is taken in order to protect the warranty. Certain equipment alteration, repair, and manipulation of equipment without the manufacturer's consent may void the product warranty. Contact AAON Technical Support for assistance with

handling damaged goods, repairs, and freight claims: (918) 382-6450.

Storage

If installation will not occur immediately following delivery, store equipment in a dry protected area away from construction traffic and in the proper orientation as marked on the packaging with all internal packaging in place. Secure all loose-shipped items.

Chiller

WARNING

COMPRESSOR CYCLING

3 MINUTE MINIMUM OFF TIME
To prevent motor overheating compressors must cycle off for a minimum of 3 minutes.

3 MINUTE MINIMUM ON TIME
To maintain the proper oil level compressors must cycle on for a minimum of 3 minutes.

The cycle rate must not exceed 6 starts per hour.

Failure to observe the following instructions will result in premature failure of your system, and possible voiding of the warranty.

CAUTION

CRANKCASE HEATER OPERATION
Units may be equipped with compressor crankcase heaters, which should be energized at least 24 hours prior to cooling operation, to clear any liquid refrigerant from the compressors.

Never turn off the main power supply to the unit, except for complete shutdown. When power is cut off from the unit, any compressors using crankcase heaters cannot prevent refrigerant migration. This means the compressor will cool down, and liquid refrigerant may accumulate in the compressor. The compressor is designed to pump refrigerant gas and damage may occur when power is restored if liquid enters the compressor.

CAUTION

Rotation must be checked on all MOTORS AND COMPRESSORS of three phase units. All motors, to include and not be limited to pump motors and condenser fan motors, should all be checked by a qualified service technician at startup and any wiring alteration should only be made at the unit power connection.

Before unit operation, the main power switch must be turned on for at least 24 hours for units with compressor crankcase heaters. This will give the crankcase heater time to clear any liquid accumulation out of the compressor before it is required to run.

CAUTION

Scroll compressors are directional and will be damaged by operation in the wrong direction. Low pressure switches on compressors have been disconnected after factory testing. Rotation should be checked by a qualified service technician at startup using suction and discharge pressure gauges and any wiring alteration should only be made at the unit power connection.

Never cut off the main power supply to the unit, except for complete shutdown. Always control the system from the building management system, or control panel, never at the main power supply (except for emergency or for complete shutdown of the system).

Scroll compressors must be on a minimum of 3 minutes and off for a minimum of 3 minutes. The cycle rate must be no more than 6 starts per hour.

The chiller is furnished with a pressure differential switch that is factory installed between the chilled water supply and return connections. This sensor must not be bypassed since it provides a signal to the unit controller that water flow is present in the heat exchanger and the unit can operate without the danger of freezing the liquid.

Compressor life will be seriously shortened by reduced lubrication, and the pumping of excessive amounts of liquid oil and liquid refrigerant.

Wiring Diagrams

A complete set of unit specific wiring diagrams in both ladder and point-to-point form are laminated in plastic and located inside the control compartment door.

General Maintenance

When the initial startup is made and on a periodic schedule during operation, it is necessary to perform routine service checks on the performance of the chiller. This includes reading and recording suction pressures and checking for normal sub-cooling and superheat. See the air-cooled condenser sections in this manual for specific details.

Chiller Primary Pumping

Primary pumping uses a single pump to move water (or glycol) through the chiller barrel and back to the building. This pumping package provides a constant or variable flow of water to the system. The pump is activated whenever the chiller is given a run signal.

Water enters the unit through the return water piping, and then travels through an air separator to remove any air that is entrapped in the water. Following this, the water flows through a suction guide with strainer. The end of the suction guide is removable for strainer access. The strainer assembly is composed of two parts, the operational strainer and the startup strainer, (located inside the operational strainer) which is to be removed 24 hours after startup.

The pump is installed after the suction guide, and before a combination valve (Flo-Trex). This combination valve acts as isolation valve, check valve, and flow balancing valve. The shell and tube or brazed plate evaporator, is placed after the combination valve in the water circuit, with a flow switch installed across its inlet and outlet. This flow switch closes when the velocity is above 0.7 feet per second. The closing flow switch signals the control system to indicate flow through the heat exchanger and allow cooling to activate as required to maintain the setpoint. The water exiting the chiller evaporator leaves the unit through the water out connection.

Automatic Air Vent
There is an automatic air vent installed at the high point of the system inside the pumping package compartment. The air vent valve must be in the proper position for operation. Ensure that the small vent cap is loosened two turns from the closed position, allowing air to be vented from the system. It is advisable to leave the cap on to prevent impurities from entering the valve. See appendix for additional information.

Dual Pumps
When redundant pumping is required, factory installed dual pumps can be ordered. A dual pump is a pump with two independent motors and pumps in a single casing. This dual pump has a swing split-flapper valve in the discharge port to prevent liquid recirculation when only one pump is operating. Isolation valves in the casing allow one pump to be isolated and removed for service while the other pump is still operating.

The controls package will activate the pump when the unit is given a run command. If the controls do not recognize flow in 60 seconds, the second pump will be activated and an alarm signal will be generated. If the second pump does not activate, the cooling will be locked out. See appendix for additional information.

Pressure Gauges and Thermometers
Pressure gauges and thermometers are available as a factory installed option. Thermometers are installed on the inlet and outlet of the unit. One pressure gauge is installed at each pump. This pressure gauge is connected in three places to the water piping before the suction guide/strainer, after the suction guide and before the pump, and after the pump. There is also a needle valve at each of these points to isolate the pressure. To measure the pressure at any given point, open the needle valve at that point and close the other two needle valves. One gauge is used so that the calibration of the pressure gauge is irrelevant in the calculation of the differential pressure.

Pipe Insulation
The water piping and components on units with pumping packages are not insulated at the factory. Insulation should be installed on the water piping after the system has been checked for leaks.

Installation

Chiller Placement
The AAON LN Series is designed for outdoor applications and mounting at ground level or on a rooftop. It must be placed on a level and solid foundation that has been prepared to support its weight.

The placement relative to the building air intakes and other structures must be carefully selected. Be sure to observe the dimensions that are on the rating plate of the chiller for operational and service clearances.

Table 1 - Service Clearances

Location	Unit Size
	45-140 tons
Front - (Controls Side)	72”
Back	72”
Ends	96”
Top	Unobstructed

Condenser coils and fans must be free of any obstructions in order to start and operate properly with a correct amount of airflow. For proper unit operation, the immediate area around condenser must remain free of debris that may be drawn in and obstruct airflow in the condensing section.

Consideration must be given to obstruction caused by snow accumulation when placing the unit.

Curb and Steel Mount Installation
Make openings in the roof decking large enough to allow for water piping, electrical penetrations, and workspace only. Do not make openings larger than necessary. Set the curb to coincide with the openings. Make sure curb is level.

If the LN is installed on a curb, use a curb cap for the open area under the condenser section.

Unit specific curb drawing is included with job submittal. See SMACNA *Architectural Sheet Metal Manual* for curb installation details.

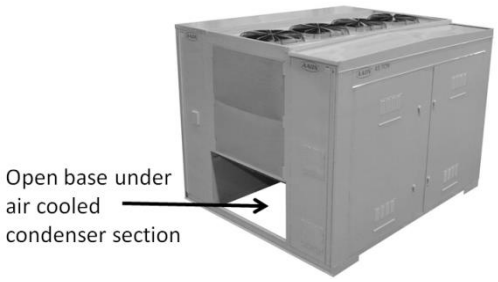

Figure 1 - LN Base

CAUTION

All roofing work should be performed by competent roofing contractors to avoid any possible leakage.

Units require rail support along all four sides of the unit base.

When installed at ground level, a one-piece concrete slab should be used with footings that extend below the frost line. Care must also be taken to protect the coil and fins from damage due to vandalism or other causes.

If unit is elevated a field supplied catwalk is recommended to allow access to unit service doors.

This unit ships with a curb gasket that is 1¼” wide and 1½” tall. It is recommended that this or another similar gasket be used between the curb and the unit to reduce vibration from the unit to the building.

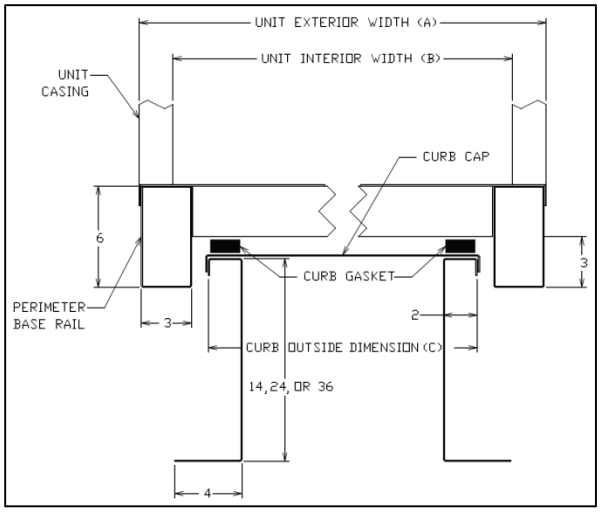

Figure 2 - Curb Mounting with Dimensions

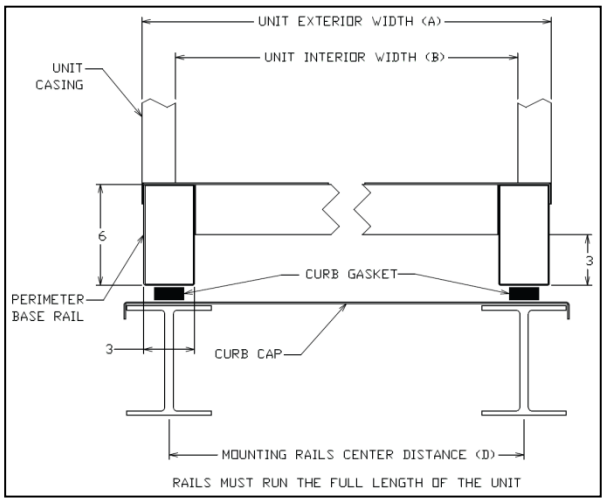

Figure 3 - Steel Mounting Rail with Dimensions

Table 2 - Mounting Dimensions

Tons	A	B	C*	D**
45-140	142”	138”	134”	139”

*Figure 2
**Figure 3

Lifting and Handling

If cables or chains are used to hoist the unit they must be the same length and care should be taken to prevent damage to the cabinet. See Figure 5 and Figure 6 for additional information.

Before lifting unit, be sure that all shipping material has been removed from unit. Secure hooks and cables at all lifting points/ lugs provided on the unit.

Hoist unit to a point directly above the curb or mounting rail. Be sure that the gasket material has been applied to the curb or mounting rail.

Carefully lower and align unit with utility and duct openings. Lower the unit until the unit skirt fits around the curb. Make sure the unit is properly seated on the curb and is level.

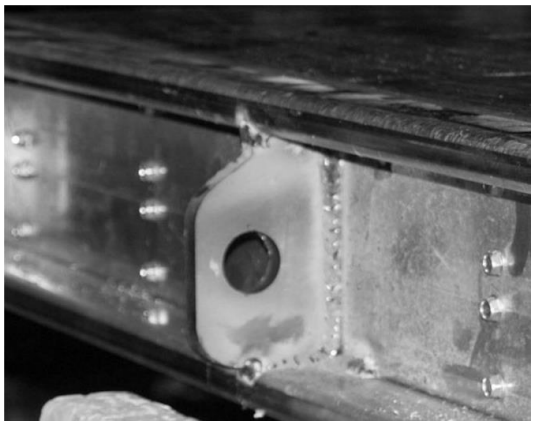

Figure 4 - Lifting Points

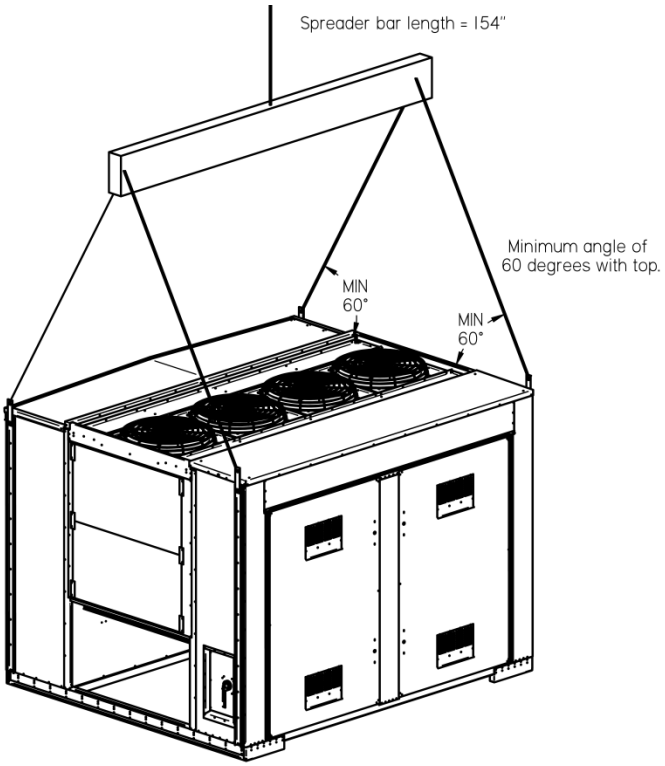

Figure 5 - Lifting Detail of a 45-60 ton Unit

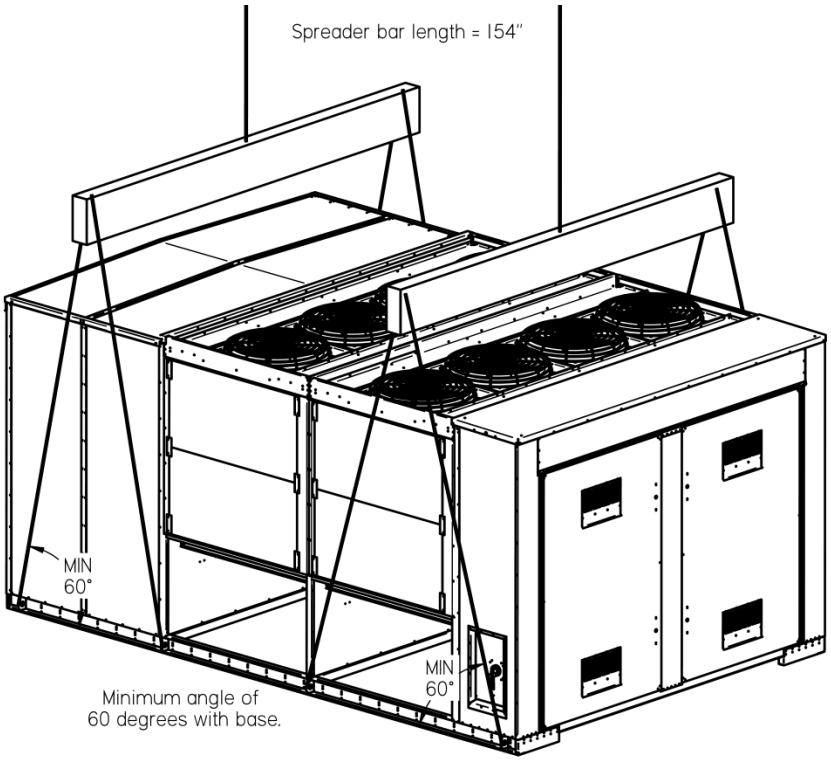

Figure 6 - Lifting Detail of a 75-140 ton Unit

Lifting slot locations are unit specific.
Unit must be rigged at all marked lifting points.

Water Connection
Connect the supply and return water lines. The connection size is listed on the unit rating sheet, along with the designed volumetric flow rate. The maximum operating pressure for AAON LN Series units is 125 psi.

⚠ CAUTION

PVC (Polyvinyl Chloride) and CPVC (Chlorinated Polyvinyl Chloride) are vulnerable to attack by certain chemicals. Polyolester (POE) oils used with R-410A and other refrigerants, even in trace amounts, in a PVC or CPVC piping system will result in stress cracking of the piping and fittings and complete piping system failure.

⚠ WARNING

The chiller must be operated only with liquid flowing through the evaporators.

⚠ CAUTION

Installing Contractor is responsible for proper sealing of the water piping entries into the unit Failure to seal the entries may result in damage to the unit and property.

Mounting Isolation
For roof mounted applications or anytime vibration transmission is a factor, vibration isolators may be used.

Access Doors
Lockable access door is provided to the compressor and control compartment. A separate access door is also provided to the pumping package compartment.

A light switch with service lights is provided on the wall of the compressor and control compartment.

End Flashing Installation
On all LN Series units the cabinet width will overhang the shipping trailer on each side.

In order to secure and protect the unit during transit the sheet metal end flashings have been removed from the unit. The slot created at the base of each end of the unit allows the unit to set firmly on the trailer deck.

Sheet metal flashings are shipped loose with the unit and once the unit is set into place the flashings must be installed on each end of the unit to complete the finished seal at the base. The flashings are unit specific and designed to cover the slot at each end of the unit to prevent water run-off into the curb.

Failure to attach and seal the end of unit with the flashings may result in water leakage into the curb.

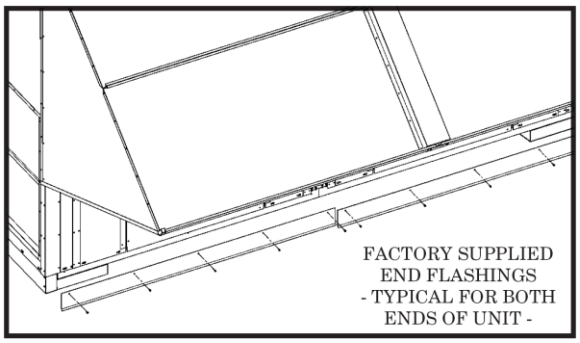

Figure 7 - Factory Supplied End Flashings

⚠ CAUTION

In order to prevent water leakage into the roof curb, the factory provided sheet metal flashings MUST BE attached to the unit base to cover the shipping slots at both ends of the unit.

Low Ambient Operation

If the chiller is ordered for a Low Ambient application, the liquid system must use a glycol solution and the piping must be insulated to be prepared for freezing conditions. Care must be taken in the source of electrical power for the heating tape and thermostat.

Electrical

The single point electrical power connections are made in the electrical control compartment.

The microprocessor control furnished with the unit is supplied with its own power supply factory wired to the main power of the outdoor mechanical room.

Verify the unit nameplate voltage agrees with the power supply. Connect power and control field wiring as shown on the unit specific wiring diagram provided with the unit.

Table 3 - Nameplate Voltage Markings

Voltage Feature		Nameplate Voltage Marking	Min/Max VAC
2	230V/3Φ/60Hz	230	197/252
3	460V/3Φ/60Hz	460	456/504
4	575V/3Φ/60Hz	575	570/630
8	208V/3Φ/60Hz	208	197/228

Size supply conductors based on the unit MCA rating. Supply conductors must be rated a minimum of 167°F (75°C).

Route power and control wiring, separately, through the utility entry. Do not run power and signal wires in the same conduit.

Protect the branch circuit in accordance with code requirements. The unit must be electrically grounded in accordance with local codes, or in the absence of local codes, the current National Electric Code, ANSI/NFPA 70 or the current Canadian Electrical Code CSA C22.1.

Power wiring is to the unit terminal block or main disconnect. All wiring beyond this point has been done by the manufacturer and cannot be modified without effecting the unit's agency/safety certification.

⚠ WARNING

Electric shock hazard. Before attempting to perform any installation, service, or maintenance, shut off all electrical power to the unit at the disconnect switches. Unit may have multiple power supplies. Failure to disconnect power could result in dangerous operation, serious injury, death, or property damage.

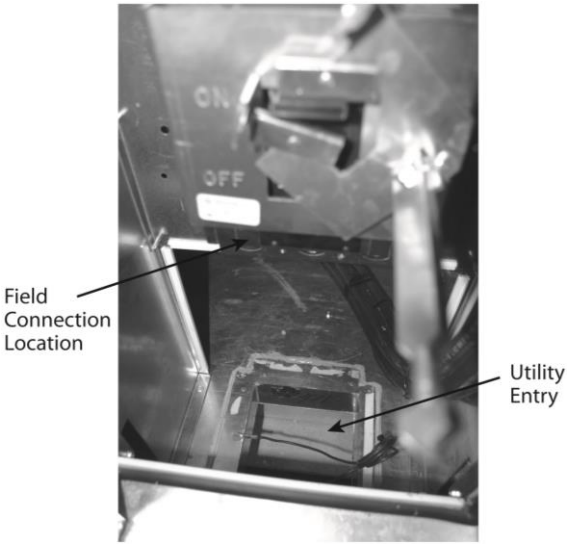

Figure 8 - Front View of Utility Entry and Power Switch from Control Compartment

⚠ CAUTION

Installing Contractor is responsible for proper sealing of the electrical and gas entries into the unit. Failure to seal the entries may result in damage to the unit and property.

Startup technician must check for proper motor rotation and check fan motor amperage listed on the motor nameplate is not exceeded. Motor overload protection may be a function of the variable frequency drive and must not be bypassed.

Note: All units are factory wired for 208/230V, 460V, or 575V. If unit is to be connected to a 208V supply, the transformer must be rewired to 208V service. For 208V service interchange the yellow and red conductor on the low voltage control transformer.

Red-Black for 208V
Yellow-Black for 230V

Wire control signals to the unit's low voltage terminal block located in the controls compartment. All wiring beyond this point has been completed by the manufacturer and cannot be modified without effecting the unit's agency/safety certification.

⚠ CAUTION

Scroll compressors are directional and will be damaged by operation in the wrong direction. Low pressure switches on compressors have been disconnected after factory testing. Rotation should be checked by a qualified service technician at startup using suction and discharge pressure gauges and any wiring alteration should only be made at the unit power connection.

If any factory installed wiring must be replaced, use a minimum 221°F (105°C) type AWM insulated conductors.

Supply voltage must be within the min/max range shown on the unit nameplate. Available short circuit current should not exceed the short circuit current rating (SCCR) shown on the unit nameplate.

⚠ CAUTION

Three phase voltage imbalance will cause motor overheating and premature failure.

Three phase voltage imbalance will cause motor overheating and premature failure. The maximum allowable imbalance is 5%.

Voltage imbalance is defined as 100 times the maximum deviation from the average voltage divided by the average voltage.

Example:
(218V+237V+235V)/3 = 230V, then 100*(230V-218V)/230V = 5.2%, which exceeds the allowable imbalance.

Check voltage imbalance at the unit disconnect switch and at the compressor terminal. Contact your local power company for line voltage corrections.

CAUTION

Rotation must be checked on all MOTORS AND COMPRESSORS of three phase units. Condenser fan motors should all be checked by a qualified service technician at startup and any wiring alteration should only be made at the unit power connection. Variable frequency drives are programmed to automatically rotate the fan in the correct rotation. Do not rely on fans with variable frequency drives for compressor rotation.

Variable Speed Compressors

Variable speed compressors should not be operated outside the factory determined frequency range. The factory determined compressor VFD frequency range is given below in Table 4

Table 4- Tandem Circuited Variable Speed Compressor VFD Frequency Range

Model (LN-)	*Compressor VFD Range (Hz)*
208V, 230V, 460V and 575V Units	
045, 055, 060	45-65Hz
075	45-70Hz
095, 105, 120	35-60 Hz
140	35-65 Hz

CAUTION

No variable speed compressor shall operate below 35 Hz. Operating variable speed compressors outside the frequency range specified in this manual voids all warranties and may result in compressor failure.

Startup

(See back of the manual for startup form)

⚠ WARNING

Electric shock hazard. Shut off all electrical power to the unit to avoid shock hazard or injury from rotating parts.

⚠ WARNING

Improper installation, adjustment, alteration, service, or maintenance can cause property damage, personal injury, or loss of life. Startup and service must be performed by a Factory Trained Service Technician

Before the startup of the chiller be sure that the following items have been checked.

1. Verify that electrical power is available to the unit.

2. Verify that any remote stop/start device connected to the chiller controller is requesting the chiller to start.

3. Verify that liquid flow is present through the chiller from the building.

4. There should be a building load of at least 25% of the chiller capacity in order to properly check operation.

5. With the main power switch off, review the MCS Controller Manual provided with the chiller. Understand the keypad functions, how to set the leaving water temperature setpoint, and how to initiate the Run State.

Use the general check list at the top of the startup form to make a last check that all the components are in place, water flow is present, and the power supply is energized.

Using the controller keypad, individually set the outputs in “Manual On” to confirm relay closure and compressor operation.

⚠ CAUTION

Rotation must be checked on all MOTORS AND COMPRESSORS of three phase units. All motors, to include and not be limited to pump motors and condenser fan motors, should all be checked by a qualified service technician at startup and any wiring alteration should only be made at the unit power connection.

Cycle through all the compressors to confirm that all are operating within tolerance.

While performing the check, use the startup form to record observations of compressor amps and refrigerant pressures.

When all is running properly, place the controller in the Run mode and observe the system until it reaches a steady state of operation.

Note: For more information on programming the controller refer to the MCS Controller manual provided with the chiller.

⚠ CAUTION

Before completing installation, a complete operating cycle should be observed to verify that all components are functioning properly.

Axial Flow Condenser Fans

Multi-Wing Z Series Aluminum Fan Blade Pitch Angle Setting Instructions

1. Maintain the balance of fan
Mark the hub castings across a joint, so the fan hub can be reassembled in the same orientation.

Mark the location of any balancing weight. Balancing weight will be on the outer bolt circle, in the form of washers, and/or longer bolts, or an additional balancing nut.

Number the blades and blade sockets, so that they are replaced into their original position.

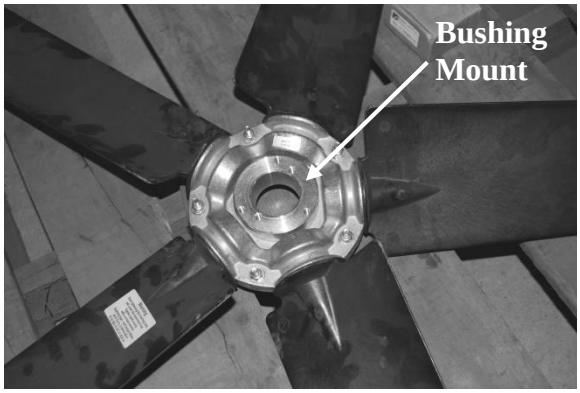

Figure 9 - Fan with the HUB on the top and RET on the bottom.

2. Determine the direction of rotation
Right, R, is clockwise when facing the discharge side of the fan and Left, L, is counterclockwise when facing the discharge side of the fan.

3. Determine the bushing mount location
The bushing mount is the center section of the hub through which the fan is mounted to the shaft, and typically contains either setscrews or a center-tapered hole where the bushing inserts.

Location A is with the bushing mount on air inlet side of the fan.
Location B is with the bushing mount on air discharge side of the fan.

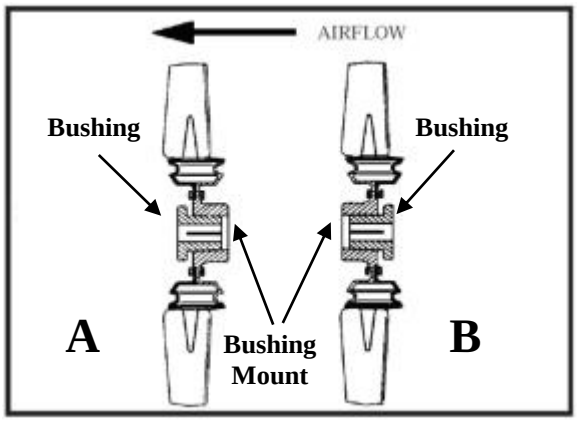

Figure 10 - Bushing Mount Location

4. Determine the pin location groove
Disassemble fan on a flat surface and note in which groove the pin is located.

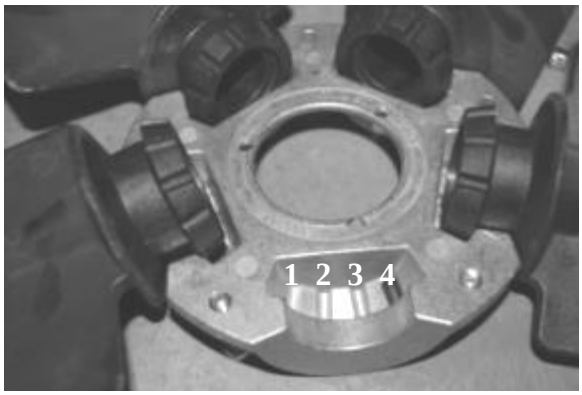

Figure 11 - RET with Pin in Groove 4

5. *Determine whether the pin is in the HUB or RET*

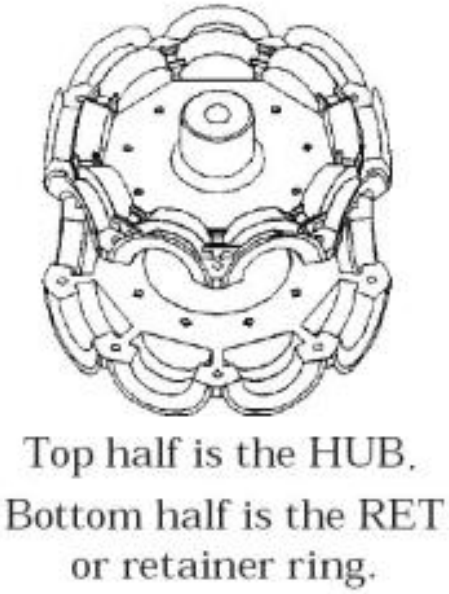

Figure 12 - Fan HUB and RET Castings

6. *Determine the current blade pitch and the pin location for the new blades*

Table 5 - Return/Exhaust Fan Pin Location

Type	Bushing Mount	Blade Pitch Angle									
		20°	25°	28°	30°	33°	35°	38°	40°	45°	50°
5Z	A	-	RET	-	RET	RET	RET	HUB	HUB	HUB	HUB
	B	-	HUB	-	HUB	HUB	HUB	RET	RET	RET	RET

Table 6 - Return/Exhaust Fan Pin Location

Type	Rot.	Blade Pitch Angle									
		20°	25°	28°	30°	33°	35°	38°	40°	45°	50°
5Z	R	-	4	-	3	2	1	4	3	2	1
	L	-	1	-	2	3	4	1	2	3	4

7. *Replace fan blades in the new pin location and reassemble the fan*

Replace the blades with the pin in the 1, 2, 3, or 4 groove position of either the HUB or RET. Assemble the fan making sure to place the blades in their previous blade sockets, to match up the previous orientation of HUB and RET and to replace any balancing weights in their previous locations. Tighten bolts in a cross pattern to 5-6 ft-lbs. of torque.

Multi-Wing W Series Black Glass Reinforced Polypropylene Fan Blade Pitch Angle Setting Instructions

Contact the AAON parts department to acquire the new pitch pins for the fan blades.

Note original position of retaining plates, center boss and all hardware including additional hardware used for balancing.

1. Remove all the bolts and nuts.

2. Determine blade rotation – on the concave side of the blade is a blade marking showing 6WR, 6WL, 7WL, 7WR, or 9WR. The "L" and "R" denote the rotation of the blade.

3. Replace the pitch insert in the blade root with an insert of the desired pitch.

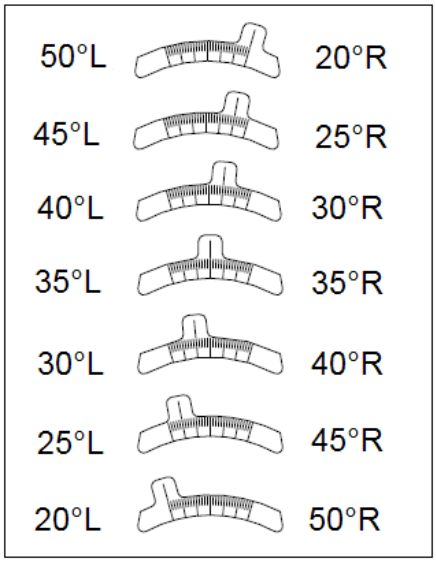

Figure 13 - Pitch Insert

4. Replace blades to their original location.

5. Replace all nuts, bolts, and washers on the fan hub.

6. Replace retaining plates and center boss to original location.

7. Tighten nuts and bolts to 14 ft-lbs of torque.

Fan Assembly Bushings

The fan assembly bushings should be tightened to the specifications listed in the following table.

Table 7 - Fan Assembly Bushing Torque Specifications

Bushing	**Tightening Torque (in-lbs.)**
H X 1.125"	95
H X 1.375"	95
SH X 1.125"	108
SH X 1.375"	108
SD X 1.125"	108
SD X 1.375"	108
SD X 1.625"	108
SD X 1.875"	108
SK X 2.125"	180

Maintenance

General
Qualified technicians must perform routine service checks and maintenance. This includes reading and recording the condensing and suction pressures and checking for normal sub-cooling and superheat.

Air-cooled chillers require maintenance schedules/procedures. Unit specific instructions are included in this manual.

Compressors
The scroll compressors are fully hermetic and require no maintenance except keeping the shell clean.

Refrigerant Suction Line Filter
Each refrigerant circuit contains a replaceable core suction line filter. **One month after start-up**, remove the filter element.

The replaceable core suction filters are provided with pressure taps and shutoff valves for isolation when removing the filter. For safety purposes a service manifold must be attached prior to filter maintenance.

⚠ WARNING

Prior to filter core service, a service manifold MUST BE attached to in and out pressure connections to assure no pressure exists during filter maintenance. Non-compliance could result in injury or violation of EPA regulations.

⚠ WARNING

Service gauges MUST BE connected before operating the isolation valves for the replaceable core filter.

Suction Filter Removal Instructions

1. Shut down operation of the unit
2. Close both shut-off valves to isolate the suction filter

3. Reclaim the refrigerant from the suction filter section
4. Remove the bolts from the suction filter end plate

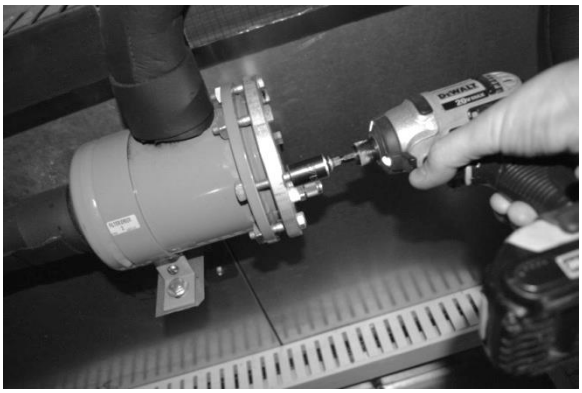

5. Remove the pleated filter assembly

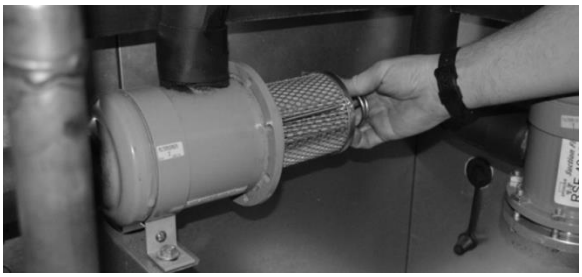

6. Replace the suction filter end plate and bolts
7. Evacuate the suction filter assembly to 500 microns
8. Open both shut-off valves

Adjusting Refrigerant Charge

All AAON chillers are shipped with a full factory charge. Periodically adjusting the charge of a system may be required.

Adjusting the charge of a system in the field must be based on determination of liquid sub-cooling and evaporator superheat. On a system with an expansion valve liquid sub-cooling is more representative of the charge than evaporator superheat but both measurements must be taken.

⚠ CAUTION

Polyolester (POE) and Polyvinylether (PVE) oils are two types of lubricants used in hydrofluorocarbon (HFC) refrigeration systems. Refer to the compressor label for the proper compressor lubricant type.

⚠ CAUTION

The Clean Air Act of 1990 bans the intentional venting of refrigerant (CFC's and HCFC's) as of July 1, 1992. Approved methods of recovery, recycling or reclaiming must be followed. Fines and/or incarceration may be levied for non-compliance.

Before Charging

Refer to the unit nameplate as a reference when determining the proper refrigerant charge.

Unit being charged must be at or near full load conditions before adjusting the charge.

Units equipped with hot gas bypass must have the hot gas bypass valve closed to get the proper charge.

After adding or removing charge the system must be allowed to stabilize, typically 10-15 minutes, before making any other adjustments.

The type of unit and options determine the ranges for liquid sub-cooling and evaporator superheat. Refer to Table 8 when determining the proper sub-cooling.

For units equipped with low ambient (0°F) option see the special charging instructions at the end of this section.

Checking Liquid Sub-cooling

Measure the temperature of the liquid line as it leaves the condenser coil.

Read the gauge pressure at the liquid line close to the point where the temperature was taken. You must use liquid line pressure as it will vary from discharge pressure due to condenser coil pressure drop.
Convert the pressure obtained to a saturated temperature using the appropriate refrigerant temperature-pressure chart.

Subtract the measured liquid line temperature from the saturated temperature to determine the liquid sub-cooling.

Compare calculated sub-cooling to the table below for the appropriate unit type and options.

Checking Evaporator Superheat

Measure the temperature of the suction line close to the compressor.

Read gauge pressure at the suction line close to the compressor.

Convert the pressure obtained to a saturated temperature using the appropriate refrigerant temperature-pressure chart.

Subtract the saturated temperature from the measured suction line temperature to determine the evaporator superheat.

For refrigeration systems with tandem scroll compressors, it is critical that the suction superheat setpoint on the expansion valve is set with one compressor running. The suction superheat should be 10-13°F with one compressor running. The suction superheat will increase with both compressors in a tandem running. Inadequate suction superheat can allow liquid refrigerant to return to the compressors which will wash the oil out of the compressor. Lack of oil lubrication will destroy a compressor. Liquid sub-cooling should be measured with both compressors in a refrigeration system running.

⚠ CAUTION

Expansion valves must be adjusted to approximately 10-15°F of suction superheat. Failure to have sufficient superheat will damage the compressor and void the warranty.

Compare calculated superheat to Table 8 for the appropriate unit type and options.

Table 8 - Acceptable Refrigeration Circuit Values

Air-Cooled Chiller with Scroll Compressors	
Sub-Cooling[2]	12-18°F
Superheat[1]	10-15°F

[1] One compressor running in tandem
[2] Two compressors running in tandem

Adjusting Sub-cooling and Superheat Temperatures

The system is overcharged if the sub-cooling temperature is too high and the evaporator is fully loaded (low loads on the evaporator result in increased sub-cooling) and the evaporator superheat is within the temperature range as shown in Table 8 (high superheat results in increased sub-cooling)

Correct an overcharged system by reducing the amount of refrigerant in the system to lower the sub-cooling.

⚠ CAUTION

DO NOT OVERCHARGE!

Refrigerant overcharging leads to excess refrigerant in the condenser coils resulting in elevated compressor discharge pressure.

The system is undercharged if the superheat is too high and the sub-cooling is too low.

Correct an undercharged system by adding refrigerant to the system to reduce superheat and raise sub-cooling.

If the sub-cooling is correct and the superheat is too high, the expansion valve may need adjustment to correct the superheat.

Table 9 - R-410A Refrigerant Temperature-Pressure Chart

F	psig	F	psig	F	psig	F	psig	F	psig
20	78.3	**50**	142.2	**80**	234.9	**110**	364.1	**140**	540.1
21	80.0	**51**	144.8	**81**	238.6	**111**	369.1	**141**	547.0
22	81.8	**52**	147.4	**82**	242.3	**112**	374.2	**142**	553.9
23	83.6	**53**	150.1	**83**	246.0	**113**	379.4	**143**	560.9
24	85.4	**54**	152.8	**84**	249.8	**114**	384.6	**144**	567.9
25	87.2	**55**	155.5	**85**	253.7	**115**	389.9	**145**	575.1
26	89.1	**56**	158.2	**86**	257.5	**116**	395.2	**146**	582.3
27	91.0	**57**	161.0	**87**	261.4	**117**	400.5	**147**	589.6
28	92.9	**58**	163.8	**88**	265.4	**118**	405.9	**148**	596.9
29	94.9	**59**	166.7	**89**	269.4	**119**	411.4	**149**	604.4
30	96.8	**60**	169.6	**90**	273.5	**120**	416.9	**150**	611.9
31	98.8	**61**	172.5	**91**	277.6	**121**	422.5		
32	100.9	**62**	175.4	**92**	281.7	**122**	428.2		
33	102.9	**63**	178.4	**93**	285.9	**123**	433.9		
34	105.0	**64**	181.5	**94**	290.1	**124**	439.6		
35	107.1	**65**	184.5	**95**	294.4	**125**	445.4		
36	109.2	**66**	187.6	**96**	298.7	**126**	451.3		
37	111.4	**67**	190.7	**97**	303.0	**127**	457.3		
38	113.6	**68**	193.9	**98**	307.5	**128**	463.2		
39	115.8	**69**	197.1	**99**	311.9	**129**	469.3		
40	118.1	**70**	200.4	**100**	316.4	**130**	475.4		
41	120.3	**71**	203.6	**101**	321.0	**131**	481.6		
42	122.7	**72**	207.0	**102**	325.6	**132**	487.8		
43	125.0	**73**	210.3	**103**	330.2	**133**	494.1		
44	127.4	**74**	213.7	**104**	334.9	**134**	500.5		
45	129.8	**75**	217.1	**105**	339.6	**135**	506.9		
46	132.2	**76**	220.6	**106**	344.4	**136**	513.4		
47	134.7	**77**	224.1	**107**	349.3	**137**	520.0		
48	137.2	**78**	227.7	**108**	354.2	**138**	526.6		
49	139.7	**79**	231.3	**109**	359.1	**139**	533.3		

Lubrication
All original motors and bearings are furnished with an original factory charge of lubrication. Certain applications require bearings be re-lubricated periodically. The schedule will vary depending on operating duty, temperature variations, or severe atmospheric conditions.

Bearings should be re-lubricated at normal operating temperatures, but not when running.

Rotate the fan shaft by hand and add only enough grease to purge the seals. **DO NOT OVERLUBRICATE.**

Air-Cooled Condenser
The air-cooled condenser section rejects heat by passing outdoor air over the fin tube coils for cooling of the hot refrigerant gas from the compressors. The heated air will discharge from the top of the section through the axial flow fans.

The condenser coils should be inspected yearly to ensure unrestricted airflow. If the installation has a large amount of airborne dust or other material, the condenser coils should be cleaned according to the microchannel coil cleaning section.

Brazed Plate Heat Exchanger Cleaning
Because of a normally high degree of turbulence in brazed plate heat exchangers, for many applications the heat exchanger channels are self-cleaning. For applications that are not self-cleaning (i.e. hard water at high temperatures, etc.) or applications where additional cleaning is desired, it is possible to clean the brazed plate heat exchanger by circulating a cleaning liquid.

Use a tank with weak acid, 5% phosphoric acid (H_3PO_4) or, if the exchanger is frequently cleaned, 5% oxalic acid ($H_2C_2O_4$). Pump the cleaning liquid through the exchanger. For optimum cleaning, the cleaning solution flow rate should be a minimum of 1.5 times the normal flow rate, preferably in a back-flush mode. After cleaning, the heat exchanger must be rinsed with clean water. A solution of 1-2% sodium hydroxide (NaOH) or sodium bicarbonate (NaHCO) before the last rinse ensures that all acid is neutralized.

E-Coated Coil Cleaning
Documented quarterly cleaning of e-coated coils is required to maintain coating warranty coverage. E-Coated Coil Maintenance Record document is available on the AAON website.

⚠ WARNING

Electric shock hazard. Shut off all electrical power to the unit to avoid shock hazard or injury from rotating parts.

Surface loaded fibers or dirt should be removed prior to water rinse to prevent restriction of airflow. If unable to back wash the side of the coil opposite of the coils entering air side, then surface loaded fibers or dirt should be removed with a vacuum cleaner. If a vacuum cleaner is not available, a ***soft non-metallic*** bristle brush may be used. In either case, the tool should be applied in the direction of the fins. Coil surfaces can be easily damaged (fin edges bent over) if the tool is applied across the fins.

Use of a water stream, such as a garden hose, against a surface loaded coil will drive the fibers, dirt and salts into the coil. This will make cleaning efforts more difficult. Surface loaded fibers must be completely removed prior to using low velocity clean water rinse.

Quarterly cleaning is required to maintain warranty coverage and is essential to maintain the life of an E-coated coil. Coil cleaning shall be part of the unit's regularly scheduled maintenance procedures.

Failure to clean an E-coated coil on the prescribed quarterly cycle will void the warranty and may result in reduced efficiency and durability in the environment.

A routine two-step quarterly coil cleaning is required to maintain warranty.

Step one is to clean the coil with the below approved coil cleaner (see approved products list under the "Recommended Coil Cleaners" section.

Step two is to use the approved salt/chloride remover under the "Recommended Chloride Remover" section to dissolve soluble salts and revitalize the unit. It is very important when cleaning and/or rinsing not to exceed 130°F and potable water pressure is less than 100 psig to avoid damaging the unit and coil fin edges.

⚠ CAUTION

High velocity water from a pressure washer or compressed air should only be used at a very low pressure to prevent fin and/or coil damages. The force of the water or air jet may bend the fin edges and increase airside pressure drop. Reduced unit performance or nuisance unit shutdowns may occur.

⚠ CAUTION

Harsh chemicals, household bleach, or acid cleaners should not be used to clean e-coated coils. These cleaners can be very difficult to rinse out of the coil and can accelerate corrosion and attack the e-coating. If there is dirt below the surface of the coil, use the recommended coil cleaners.

For routine quarterly cleaning, first clean the coil with the below approved coil cleaner. After cleaning the coils with the approved cleaning agent, use the approved chloride remover to remove soluble salts and revitalize the unit.

Recommended Coil Cleaner – Step 1
GulfCoat™ Coil Cleaner, assuming it is used in accordance with the manufacturer's directions on the container for proper mixing and cleaning, has been approved for use on E-coated coils to remove mold, mildew, dust, soot, greasy residue, lint and other particulate. Never use any cleaners that are not approved.

Recommended Chloride Remover – Step 2
CHLOR*RID® Concentrate, assuming it is used in accordance with the manufacturer's directions on the container for proper mixing, has been approved for use on E-coated coils to remove chlorides/salts & sulfates. Never use any chloride removers that are not approved.

Warranty Protection – Step 1
Complete the coil cleaning following these steps:

1. Ensure that the power to the unit is off and locked out.
2. Clean the area around the unit if needed to ensure leaves, grass or

loose debris will not be blown into the coil.

3. Remove panels or tops as required gaining access to the coil(s) to be cleaned.
4. Using a pump up sprayer, fill to the appropriate level with potable water and add the correct amount of approved cleaner as per manufacture instructions leaving room for the pump plunger to be reinserted.

NOTE: Coils should always be cleaned / back flushed, opposite of airflow to prevent impacting the dirt into the coil.

5. If the coils have heavy dirt, fibers, grass, leaves etc. on the interior or exterior face areas, a vacuum and brush should be used to remove those surface contaminants prior to applying cleaner. The interior floor, drain tray or pan areas should also be vacuumed.
6. Apply the mixed cleaner to coil surfaces using a pressurized pump up sprayer maintaining a good rate of pressure and at a medium size nozzle spray, (not a solid stream and not a wide fan but somewhere in the middle). Work in sections/panels ensuring that all areas are covered and kept wetted.
7. Apply the cleaner to unit interior air exiting side coil surfaces first. Work in sections/panels moving side to side and from top to bottom.
8. Generously soak coils by spraying cleaner directly on and into the fin pack section to be cleaned and allow the cleaning solution to soak for 5 to 10 minutes.
9. Using pressurized potable water, (<100 psi), rinse the coils and continue to always work in sections/panels. Start at the top of the coil and slowly move vertically downward to the bottom. Then, staying in the same vertical area, slowly move back up to the top where you started. Now move over slightly overlapping the area just completed and repeat above. Continue until all coil areas on the inside of the unit have been rinsed.
10. Complete steps 5-9 for the exterior air entering side of the coils.
11. Final rinse – Now complete a quick rinse of both sides of the coil including the headers, piping, u-bends and hairpins.
12. If the coil has a drain pan or unit floor that is holding rinse water or cleaner, extra time and attention will need to be taken in those areas to ensure a proper rinse has been completed.

Warranty Protection – Step 2

Complete the coil chloride (salt) removal following these steps:

1. CHLOR*RID® is a concentrate to be used for both normal inland applications at a 100:1 mix ratio OR for severe coastal applications 50:1 mix ratio with potable water, (2.56 ounces of Chlor*rid to 1 gal of water). Using a pump up sprayer, fill to the appropriate level with potable water and add the correct amount of CHLOR*RID® salt remover leaving room for the pump plunger to be reinserted.
2. Apply CHLOR*RID® to all external coil surfaces using a pressurized pump up sprayer maintaining a good rate of pressure and at a medium size nozzle spray, (not a solid stream and not a wide fan but somewhere in the middle). Work in sections/panels ensuring that all areas are covered and kept wetted.

3. Generously soak coils by spraying CHLOR*RID® directly on and into the fin pack section. Let stand for 5 to 10 minutes keeping the area wetted. Do not allow to dry before rinsing.
4. Using pressurized potable water, (<100 psi), rinse the CHLOR*RID® and dissolved chlorides/salts off of the coils continuing to always work in sections/panels.
5. Starting at the top of the coil, begin rinsing the coil from side to side until you reach the bottom. Repeat as many times as is necessary to ensure all coil sections/panels have been completed and are thoroughly rinsed.
6. Reinstall all panels and tops that were removed.

Microchannel Coil Cleaning

Documented routine cleaning of microchannel coils with factory provided e-coating is required to maintain coating warranty coverage. See E-Coated Coil Cleaning section.

Air-cooled heat exchangers may include microchannel coils.

Cleaning microchannel coils is necessary in all locations. In some locations it may be necessary to clean the coils more or less often than recommended. In general, a condenser coil should be cleaned at a minimum of once a year. In locations where there is commonly debris or a condition that causes dirt/grease build up it may be necessary to clean the coils more often. Proper procedure should be followed at every cleaning interval. Using improper cleaning technique or incorrect chemicals will result in coil damage, system performance fall off, and potentially leaks requiring coil replacement.

Documented routine cleaning of microchannel coils with factory provided e-coating is required to maintain coating warranty coverage. Use the E-Coated Coil Cleaning section for details on cleaning e-coated coils.

Field applied coil coatings are not recommended with microchannel coils.

Allowed Chemical Cleaners and Procedures

AAON recommends certain chemicals that can be used to remove buildup of grime and debris on the surface of microchannel coils. These chemicals have been tested for performance and safety and are the only chemicals that AAON will warrant as correct for cleaning microchannel coils.

There are three procedures that are outlined below that will clean the coils effectively without damage to the coils. Use of any other procedure or chemical may void the warranty to the unit where the coil is installed. **With all procedures make sure the unit is off before starting.**

⚠ WARNING ⚠

Electric shock hazard. Shut off all electrical power to the unit to avoid shock hazard or injury from rotating parts.

The water pressure used to clean should not exceed 140 psi, from no closer than 6 inches from the coils, and with the water aimed perpendicular to the coils.

#1 Simple Green

Simple Green is available from AAON Parts and Supply (Part# T10701) and is biodegradable with a neutral 6.5 pH. Recommendation is to use it at a 4 to 1 mix. Use the following procedure.

1. Rinse the coil completely with water. Use a hard spray but be careful not to bend or damage the fins. A spray that is too hard will bend the fins. Spray from the fan side of the coil.
2. With a pump sprayer filled with a mix of 4 parts water to one part Simple Green spray the air inlet face of the coil. Be sure to cover all areas of the face of the coil.
3. Allow the coil to soak for 10-15 minutes.
4. Rinse the coil with water as in step one.
5. Repeat as necessary.

#2 Vinegar

This is standard white vinegar available in gallons from most grocery stores. It has a pH of 2-3, so it is slightly acidic. Use the following procedure.

1. Rinse the coil completely with water. Use a hard spray but be careful not to bend or damage the fins. A spray that is too hard will bend the fins. Spray from the fan side of the coil.
2. Use a pump sprayer filled with vinegar (100%). Spray from the face of the coil in the same direction as the airflow. Be sure to cover all areas of the face of the coil.
3. Allow the coil to soak for 10-15 minutes.
4. Rinse the coil with water as in step one.
5. Repeat as necessary.

#3 Water Flush

This procedure can be used when the only material to cause the coil to need cleaning is debris from plant material that has impinged the coil face.

1. Rinse the coil completely with water. Use a hard spray but be careful not to bend or damage the fins. A spray that is too hard will bend the fins. Spray from the fan side of the coil.
2. Spray and rinse the coil from the face.

⚠ CAUTION

Use pressurized clean water, with pressure not to exceed 140 psi. Nozzle should be 6” and 80° to 90° from coil face. Failure to do so could result in coil damage.

Application Examples

The three procedures can be used to clean microchannel coils. They will fit with the application depending on the area. In some areas where the spring/summer has a large cottonwood bloom #3 might work fine if the unit is installed on an office building and no other environmental factors apply.

When a unit is installed where the sprinkler system has water being sprayed onto the condenser coil you might have better results using #2. Vinegar is slightly acidic and may help with the calcium build up from drying water. This also works well when grease is part of the inlet air to a condenser coil.

Generally the best and broadest based procedure is #1. The grease cutting effect of the Simple Green is good for restaurant applications.

Other Coil Cleaners

There are many cleaners on the market for condenser coils. Before using any cleaner that is not covered in this section you must get written approval from the AAON warranty and service department. Use of unapproved chemicals will void the warranty.

AAON testing has determined that unless a chemical has a neutral pH (6-8) it should not be used.

Beware of any product that claims to be a foaming cleaner. The foam that is generated is caused by a chemical reaction to the aluminum fin material on tube and fin coils and with the fin, tube, and coating material on microchannel coils.

Microchannel coils are robust in many ways, but like any component they must be treated correctly. This includes cleaning the coils correctly to give optimal performance over many years.

Service

If the unit will not operate correctly and a service company is required, only a company with service technicians qualified and experienced in both refrigerant chillers and air conditioning are permitted to service the systems to keep warranties in effect. If assistance is required, the service technician must contact AAON.

Replacement Parts

Parts for AAON equipment may be obtained from your local AAON representative. When ordering parts reference the unit serial number and part number.

AAON Technical Support

2424 S. Yukon Ave.
Tulsa, OK 74107
Ph: (918) 382-6450
techsupport@AAON.com
www.AAON.com

Note: Before calling, technician should have model and serial number of the unit available for the service department to help answer questions regarding the unit

Appendix - Water Piping Component Information

Automatic Air Vent Valves

Automatic Air Vent Valves provide automatic air venting for hot or cold water distribution systems. These vents purge air that may be in the water system.

The vent valve utilizes a float to actuate the valve plug which is located at the top of the valve. Once the air is displaced and the system pressure is sustained, the valve plug seals and prevents any water from escaping from the system.

The float vent can also operate as an anti-vacuum device since it will permit air to enter the system when it must be drained. It can also be installed to permit the separation and dispersal of air while fluid is actually circulating in the system.

Overview

- Body and cover are brass construction.
- Air vent with silicone rubber seal.
- Impurities do not usually affect function as maximum float line of water is always lower than the valve seal.
- Float is high temperature resistant polyethylene.
- Suitable for use with glycol systems.
- Can be disassembled for inspection and cleaning.

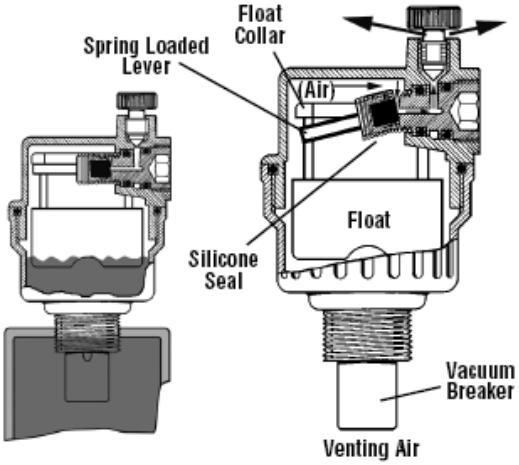

Operating Range:
Minimum working pressure: 1.45psi (10 kPa)
Maximum working pressure: 150psi (10 bars)
Temperature Range: 33°F – 240°F (5°C – 116°C)

Performance

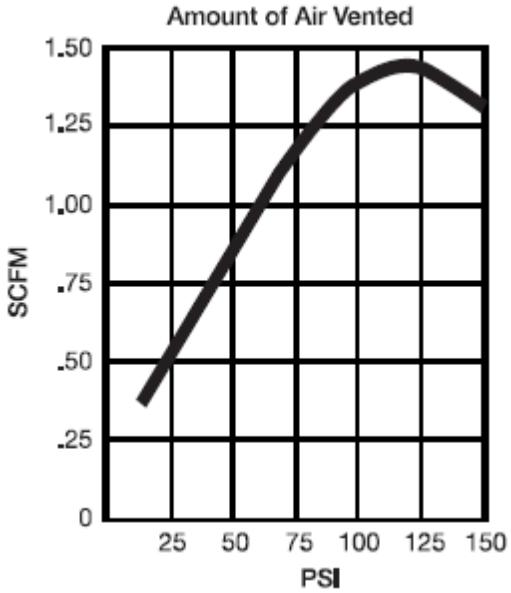

Performance curve details the quantity of air vented by the "Float Vent" according to the pressure in the system.

Note: In order to get the best results in venting air from risers, use connecting pipes

of at least 1⁄2" diameter between the “Float Vent” valves and installation.

Installation

When the air vent valve is installed as shown, the air will not be vented while the fluid is circulating in the system, but it can vent when the system is shut off.

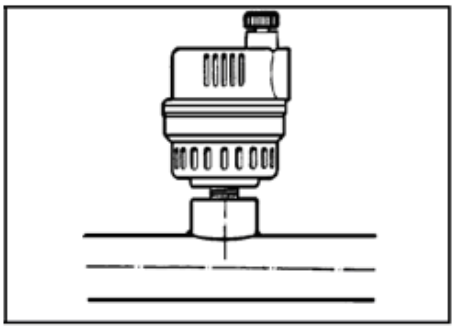

The figure below shows the installation of the vent valve for the venting of air while the fluid is circulating in the system and the required increase in pipe size in order to obtain proper separation of air from water.

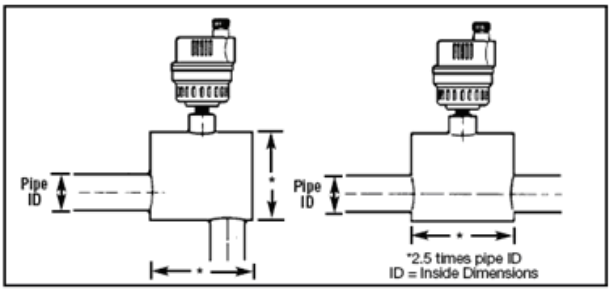

The valve should be mounted only in a vertical position as its operation is based on the vertical movement of the float.

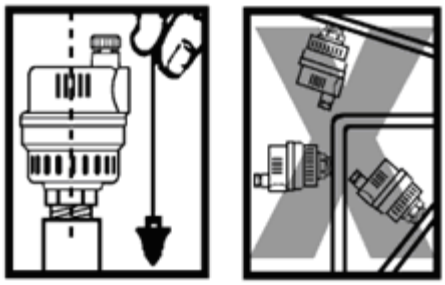

While the air vent valve is in operation, back off the small vent cap two turns. This is the proper operating setting which will allow air to be vented from the system. It is advisable to leave the cap on to prevent impurities from entering the valve.

Maintenance

No maintenance is normally necessary. However, if the FV-4M1 is disassembled for inspection or cleaning it is important that when re-assembling to ensure that the spring loaded lever properly engages under the float collar

Dimensions – Weights:

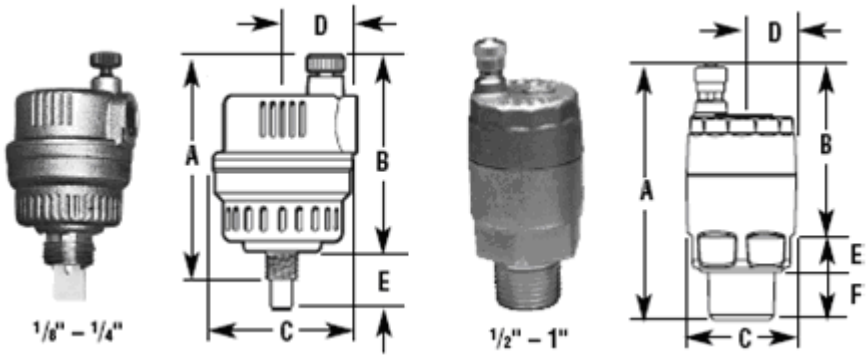

SIZE (DN)		DIMENSIONS												WEIGHT	
		A		B		C		D		E		F			
in.	mm	in.	mm	in.	mm	in.	mm	in.	mm	in.	mm	in.	mm	lbs.	kg
1/8	3	2 15/16	75	2 5/8	67	1 5/8	41	13/16	21	5/16	7.9	5/16	7.9	.40	.18
1/4	8	3 1/8	79	2 5/8	67	1 5/8	41	13/16	21	1/8	3.1	1/2	12.7	.43	.20
1/2	15	3 5/16	85	2 11/16	69	1 1/4	32	11/16	18	5/8	16	–	–	.44	.20
3/4	20	3 3/8	85	2 11/16	69	1 1/4	32	11/16	18	5/8	16	–	–	.45	.20
1	25	3 1/2	89	2 11/16	69	1 3/8	35	11/16	18	13/16	20	–	–	.47	.21

Pumps - Installation and Operating Instructions

Introduction

This document contains specific information regarding the safe installation, operating, and maintenance of Vertical In-Line pumps and should be read and understood by installing, operating, and maintenance personnel. The equipment supplied has been designed and constructed to be safe and without risk to health and safety when properly installed, operated, and maintained. The instructions following must be strictly adhered to. If clarification is needed on any point please contact Armstrong quoting the equipment serial number.

⚠ CAUTION

No Installation of this equipment should take place unless this document has been read and understood.

Where under normal operating conditions the limit of 68°C/155°F (Restricted Zone) for normal touch, or 80°C/176°F (Unrestricted Zone) for unintentional touch, may be experienced, steps should be taken to minimize contact or warn operators/users that normal operating conditions will be exceeded. In certain cases where the temperature of the pumped liquid exceeds the above stated temperature levels, pump casing temperatures may exceed 100°C/212°F and not withstanding pump insulation techniques appropriate measures must be taken to minimize risk for operating personnel.

Storage

Pumps removed from service and stored, must be properly prepared to prevent excessive rusting. Pump port protection plates must not be removed until the pump is ready to connect to the piping. Rotate the shaft periodically (At least monthly) to keep

rotating element free and bearings fully functional.

For long term storage, the pump must be placed in a vertical position in a dry environment. Internal rusting can be prevented by removing the plugs at the top and bottom of the casing and drain or air blow out all water to prevent rust buildup or the possibility of freezing. Be sure to reinstall the plugs when the unit is made operational. Rust-proofing or packing the casing with moisture absorbing material and covering the flanges is acceptable. When returning to service be sure to remove the drying agent from the pump.

Handling Large VIL Units

One effective way of lifting a large pumping unit is to place lifting hooks through the motor lifting rings or straps around the upper part of the motor. The pump and motor unit will free-stand on the casing ribs. Remove the coupling guard and place (2) lifting straps through the pump/motor pedestal, one on each side of the motor shaft and secure to the lifting device.

With the straps in place, using a spacer bar if necessary to protect the motor fan cover, the whole assembly can now be lifted securely.

Note: Handling, transportation and installation of this equipment should only be undertaken by trained personnel with proper use of lifting equipment.

Remove coupling guard and place lifting straps on each side of coupling, use spacer bar if necessary to protect motor fan cover.

Vertical Inline Pump Lifting Strap Positioning:

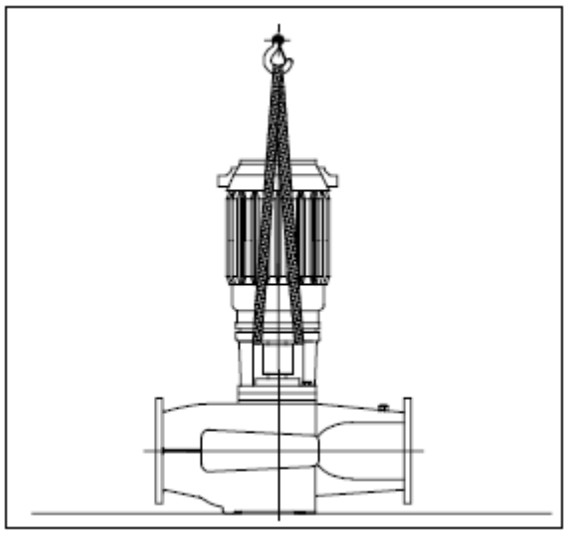

Note: All split-coupled pumps contain a tapped hole in the motor bracket above the discharge flange for draining the well. Pipe this drain hole to a floor drain to avoid overflow of the cavity caused by collecting chilled water condensate or from seal failure.

Pump Piping - General

⚠ CAUTION

Use Caution. Piping may carry high temperature fluid.

⚠ CAUTION

Discharge valve only is to be used to throttle pump flow.

The discharge valve only is to be used to throttle pump flow, not the suction valve. Care must be taken in the suction line layout and installation, as it is usually the major source of concern in centrifugal pump applications

Alignment
Alignment is unnecessary on close-coupled pumps as there is no shaft coupling.

Split-coupled units are accurately aligned at the factory prior to being shipped and do not need re-aligning when installed.

Pump Operation

⚠ CAUTION

Do not run pumps with discharge valve closed or under very low flow conditions.

Starting Pump
Ensure that the pump turns freely by hand, or with some mechanical help such as a strap and lever on larger pumps. Ensure that all protective guarding is securely fixed in position.

The pump must be fully primed on start up. Fill the pump casing with liquid and rotate the shaft by hand to remove any air trapped in the impeller. On split coupled units, any air trapped in the casing as the system is filled must be removed by the manual air vent in the seal flush line. Close-coupled units are fitted with seal flush/vent lines piped to the pump suction area. When these units operate residual air is drawn out of the pump towards the suction piping.

'Bump' or energize the motor momentarily and check that the rotation corresponds with the directional arrow on the pump casing. To reverse rotation of a three phase motor, interchange any two power leads.

Start the pump with the discharge valve closed and the suction valve open, and then gradually open the discharge valve when the motor is at operating speed. The discharge valve may be 'cracked' or open slightly at start up to help eliminate trapped air.

When stopping the pump: Close the discharge valve and de-energize the motor.

DO NOT run the pump against a closed discharge valve for an extended period of time. (A few minutes maximum)

Star-Delta motor starters should be fitted with electronic/mechanical interlocks that have a timed period of no more than 40 milliseconds before switching from star (Starting) to delta (Run) connection yet allow the motor to reach full star (Starting) speed before switching to delta (Run).

Should the pump be noisy or vibrate on start-up a common reason is overstated system head. Check this by calculating the pump operating head by deducting the suction pressure gauge value from the discharge gauge reading. Convert the result into the units of the pump head as stated on the pump nameplate and compare the values. Should the actual pump operating head be significantly less than the nameplate head value it is typically permissible to throttle the discharge isolation valve until the actual operating head is equal to the nameplate value.

Any noise or vibration usually disappears. The system designer or operator should be made aware of this soon as some adjustment may be required to the pump impeller diameter or drive settings, if applicable, to make the pump suitable for the system as installed.

⚠ CAUTION

Check rotation arrow prior to operating the unit.

Check rotation arrow prior to operating the unit. The rotation of all Vertical In-Line units is “clockwise” when viewed from the drive end. (Looking from on top of / behind the motor)

General Care

Vertical In-Line pumps are built to operate without periodic maintenance, other than motor lubrication on larger units. A systematic inspection made at regular intervals, will ensure years of trouble-free operation, giving special attention to the following:

- Keep unit clean
- Keep moisture, refuse, dust or other loose particles away from the pump and ventilating openings of the motor.
- Avoid operating the unit in overheated surroundings (Above 100ºF/40ºC).

⚠ WARNING

Electric shock hazard. Before attempting to perform any service or maintenance on pumping unit, disconnect power source to the driver, LOCK IT OFF and tag with the reason.

Any possibility of the unit starting while being serviced must be eliminated.

If mechanical seal environmental accessories are installed, ensure water is flowing through the sight flow indicator and that filter cartridges are replaced as recommended.

Pump Lubrication

Lubrication is not required. There are no bearings in the pump that need external lubrication service.

Large Series split-coupled units are installed with a shaft bushing located beneath the impeller that is lubricated from the pump discharge. This bearing is field removable for service on the 20x20x19 size without disturbing the motor or other major pump components.

Motor

Follow the lubrication procedures recommended by the motor manufacturer. Many small and medium sized motors are permanently lubricated and need no added lubrication. Generally if there are grease fittings evident the motor needs periodic lubrication, and if there are no grease fittings evident, no periodic lubrication is required.

Check the lubrication instructions supplied with the motor for the particular frame size indicated on the motor nameplate.

Mechanical Seal

Mechanical seals require no special attention. The mechanical seal is fitted with a flush line. The seal is flushed from discharge of the pump casing on split-coupled pumps and is flushed/vented to the suction on close coupled pumps.

The split-coupled pump is flushed from the pump discharge because the mechanical seal chamber is isolated from the liquid in the pump by a throttle bushing. Because the seal chamber is isolated, seal environmental controls such as filters and separators, when installed in the split-coupled flush line are very effective, as only the seal chamber needs cleansing, and will prolong seal life in HVAC systems.

Do not run the pump unless properly filled with water as the mechanical seals need a film of liquid between the faces for proper operation.

Mechanical seals may 'weep' slightly at start-up. Allow the pump to continue operating for several hours and the mechanical seal to 'seat' properly prior to calling for service personnel.

System Cleanliness
Before starting the pump the system must be thoroughly cleaned, flushed and drained and replenished with clean liquid.

Welding slag and other foreign materials, "Stop Leak" and cleaning compounds and improper or excessive water treatment are all detrimental to the pump internals and sealing arrangement.

Proper operation cannot be guaranteed if the above conditions are not adhered to.

⚠ CAUTION

Double Check Prior to Startup

Note
Particular care must be taken to check the following before the pump is put into operation:

1. Pump primed?
2. Rotation OK?
3. Lubrication OK?
4. Pipe work properly supported?
5. Voltage supply OK?
6. Overload protection OK?
7. Is the system clean?
8. Is the area around the pump clean?

Warranty
Does not cover any damages to the equipment resulting from failure to observe the above precautions.

Noise Levels
Estimated Pumping Unit Sound Power Level, Decibels, A-Weighted, at 1 m (3 ft.) from unit.

Frame Designation	1200 rpm				1800 rpm				3600 rpm			
	ODP		TEFC		ODP		TEFC		ODP		TEFC	
	hp	dB-A	hp	dB-A	hp	dB-A	hp	dB-A	hp	dB-A	hp	dB-A
140	0.75 - 1	65	0.75 - 1	64	1 - 3	70	1 - 2	70	1.5 - 3	76	1.5 - 2	85
180	1.5 - 2	67	1.5 - 2	67	3 - 5	72	3 - 5	74	5 - 7.5	80	3 - 5	88
210	3 - 5	72	3 - 5	71	7.5 - 10	76	7.5 - 10	79	10 - 15	82	7.5 - 10	91
250	7.5 - 10	76	7.5 - 10	75	15 - 20	80	15 - 20	84	20 - 25	84	15 - 20	94
280	15 - 20	81	15 - 20	80	25 - 30	80	25 - 30	88	30 - 40	86	25 - 30	95
320	25 - 30	83	25 - 30	83	40 - 50	84	40 - 50	89	50 - 60	89	40 - 50	100
360	40 - 50	86	40 - 50	86	60 - 75	86	60 - 75	95	75 - 100	94	60 - 75	101
400	60 - 75	88	60 - 75	90	100 - 125	89	100	98	125 - 150	98	100	102
440	100 - 125	91	100 - 125	94	150 - 200	93	125 - 150	102	200 - 250	101	125 - 150	104

Vibration Levels

Vertical In-Line pumps are designed to meet vibration levels set by Hydraulic Institute Standard HI Pump Vibration 9.6.4. Standard levels are as detailed below:

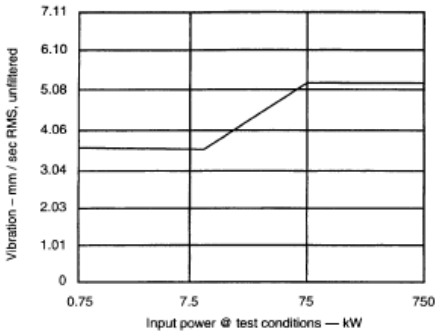

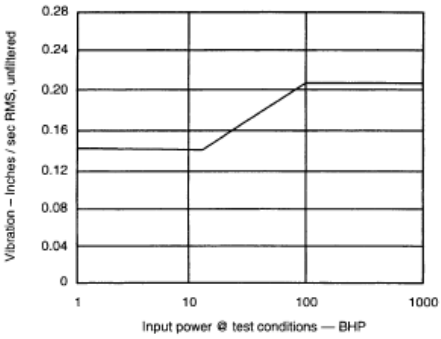

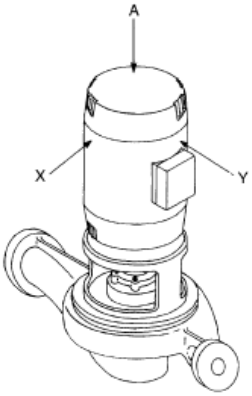

Vertical In-Line

Dual Pump Specific Information

Dual Pump Flapper Valve Operating Instructions

This unit is fitted with internal valves to allow isolation of one pump for service and to automatically prevent recirculation of the flow when only one pump is running.

Procedure for Parallel or Stand-By Pumping

Discharge and suction valve stems should be locked in the center position. This is indicated by both locking handles in the vertical position and the center pin of the locking arms (4) locked by the handles. This procedure allows the discharge flapper valves to pivot freely and locks the suction valve firmly in the center position.

Procedure for Isolation of One Side

1. Stop the pump to be serviced.
2. Close and lock the suction and discharge valves: as per instructions below.
3. Ensure seal flush line interconnection valve is closed and drain the isolated casing.
4. Service isolated pump as required.

Procedure for Starting the Pump after Servicing

1. Ensure serviced pump is fully re-assembled including all seal flush lines and drain plugs.
2. Fill the dry casing with system fluid by opening the seal flush line interconnecting valve and the air vent fitting.
3. Allow the pressure to equalize in the two casings, if necessary, by opening seal flush line interconnected valve.
4. Unlock the discharge valve as per instructions below.
5. Unlock the suction valve as per instructions below.

NOTE: Keep hands and tools away from locked suction valve arm, as the differential pressure may cause the arm to rotate quickly with force when unlocked.

6. Close the seal flush line interconnect valve and restart pump.

Valve Operation - Refer to following 3”, 4” & 6” valve illustration and the 8” valve illustration.

Discharge Valve
This valve performs the dual function of automatically sealing the discharge of the inactive pump when one pump is running and can manually be closed and locked to isolate one pump for service.

Automatic Flapper Operation
In the flapper mode the two halves of the discharge valve are free to pivot independently under normal operating conditions. The locking handle (3) should be secured with the set screw (11) in the vertical position with the center pin of the locking arm (4) trapped by the locking handle (3).

Manual Valve Locking
The locking feature of this valve is to ensure a positive seal (leak proof) of the discharge port on the pump to be serviced.

Note: Ensure the pump to be isolated is not operating before attempting to release the locking mechanism. Failure to do so may result in injury to the operator and/or damage to the pump.

Locking
1. Loosen discharge side set screw (11) to release the locking handle (3).
2. Rotate the discharge side locking handle (3) so that the handle points toward the pump to be serviced and secure in the horizontal position, using set screw (11). This releases the discharge locking arm (4).
3. Rotate discharge valve shaft (16) towards the pump to be isolated. The orientation of the shaft is indicated by the center pin on the locking arm (4).
4. Raise the locking handle (3) so that the cam on the base of the handle forces the pin of the locking arm (4) towards the pump to be isolated. The locking handle (3) should be raised to between 45 degrees and the vertical position.
5. Tighten set screw (11) to lock the locking handle (3) in position.

This handle should not be rotated past the vertical position.

Note: Ensure the isolated pump is not operating before attempting to release the locking mechanism. Failure to do so may result in injury to the operator and/or damage the pump.

Unlocking
1. Open the interconnecting valve on the seal flush line to pressurize the serviced pump and vent air through bleeder valve on series 4302
2. Close these valves once the pressure is equalized and air removed.
3. Loosen set screw (11) and lower locking handle (3) to the horizontal position, secure with set screw (11).
4. Rotate valve to center position so that the center pin of the locking arm (4) locates in the recess on the locking handle (3).
5. Loosen set screw (11) and raise locking arm (3) to the vertical position, locking the center pin in the locking arm recess, secure with set screw (11).

Suction Valve
Manual Operation
The suction side valve is designed for use as a manually operated isolation valve. This valve is not designed to automatically pivot as the discharge flappers do.

⚠ WARNING

Care should be taken when performing procedures 3 and 4. Read instructions carefully.

Locking
1. Loosen suction side set screw (11) to release the locking handle (3).

2. Rotate the suction side locking handle (3) so that the handle points towards the pump to be serviced and secure in the horizontal position, using set screw (11). This releases the suction locking arm (4).

Note: The locking handle (3) should only be rotated towards the pump stopped for service. The suction valve is designed to prevent the locking handle (1) from rotating towards the running pump, as the suction of the running pump could cause the valve to slam shut with sufficient force to injure the operator and/or cause damage to the pump. Do not attempt to circumvent this safety feature.

3. Rotate the suction valve towards the pump to be isolated. The orientation of the shaft is indicated by the center pin on the locking arm (4).
4. Loosen set screw (11) and raise the locking handle (3) so that the cam on the base on the handle forces the pin of the locking arm (4) towards the pump to be isolated. The locking handle (3) should be raised to between 45 degrees and the vertical position.

This handle should not be rotated past the vertical position.

5. Tighten set screw (11) to secure the locking handle (3) in position.

⚠ WARNING

Care should be taken when performing procedures 3 and 4. Read instructions carefully.

Unlocking

1. Open the interconnecting valve on the seal flush line to pressurize the serviced pump and vent air through bleeder valve on series 4302. Close these valves once the pressure is equalized and air removed.
2. Loosen set screw (11) and lower locking handle (3) to the horizontal position, secure with set screw (11).

NOTE: Keep hands and tools away from suction valve locking arm when freed by locking handle as differential pressure may cause arm to rotate quickly with force when unlocked.

3. Rotate valve to center position so that the center pin of the locking arm (4) is located in the recess on the locking handle (3).
4. Loosen set screw (11) and raise locking arm (3) to the vertical position, locking the center pin in the locking arm recess, secure with set screw.

Valve Illustration (3", 4" and 6")

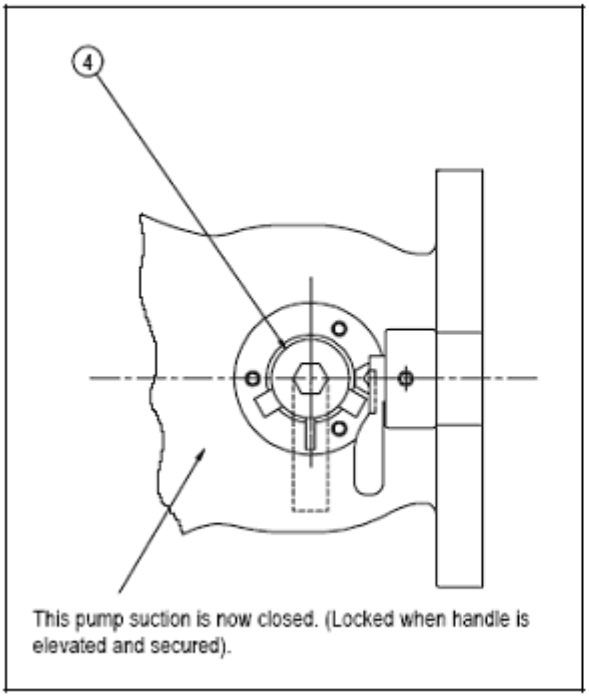

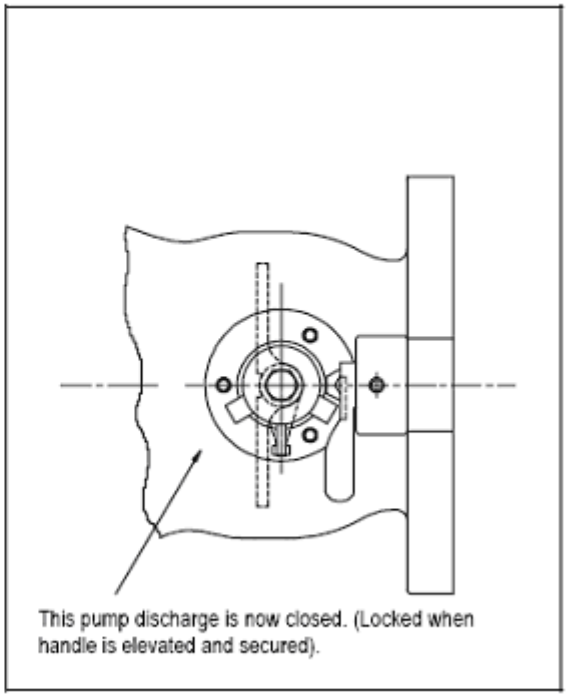

Suction Valve

Discharge Valve

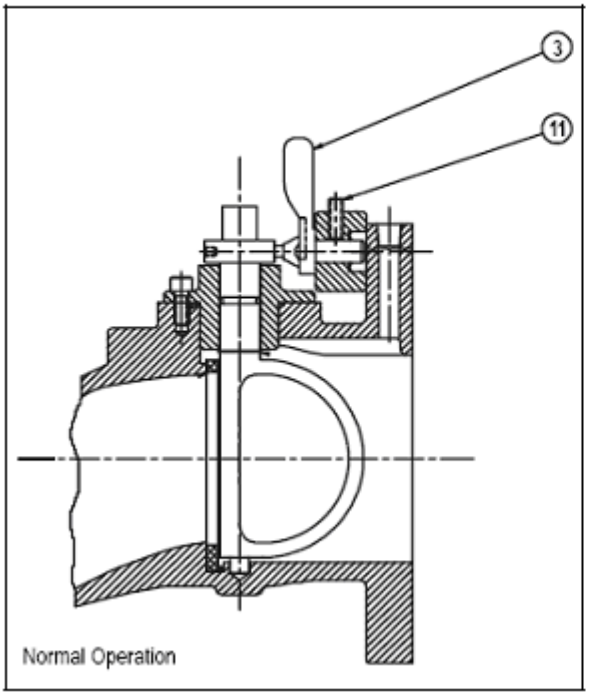

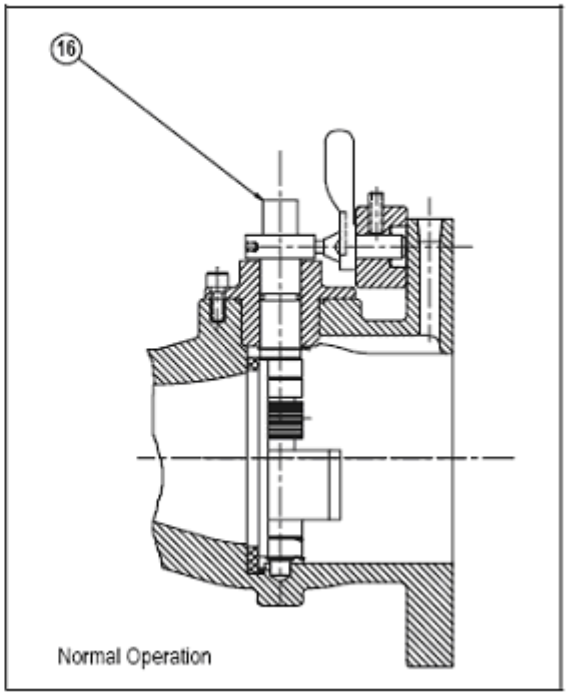

Valve Illustration (8")

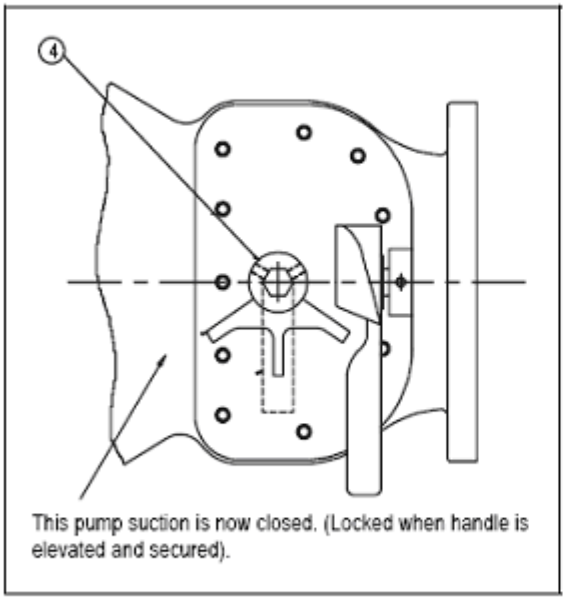

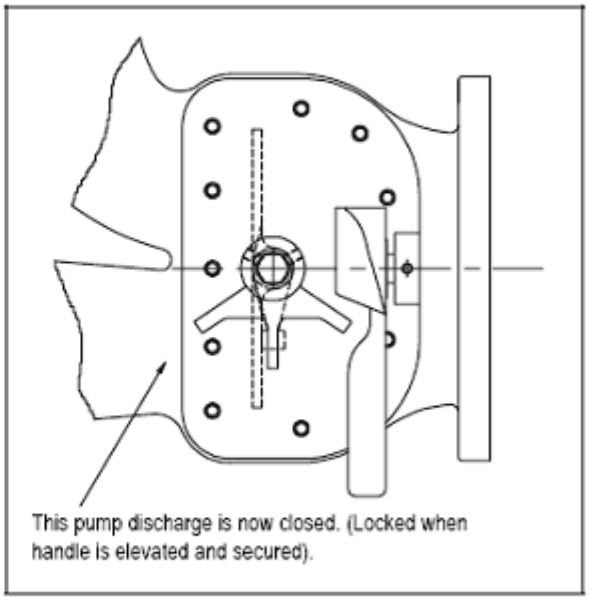

Suction Valve

Discharge Valve

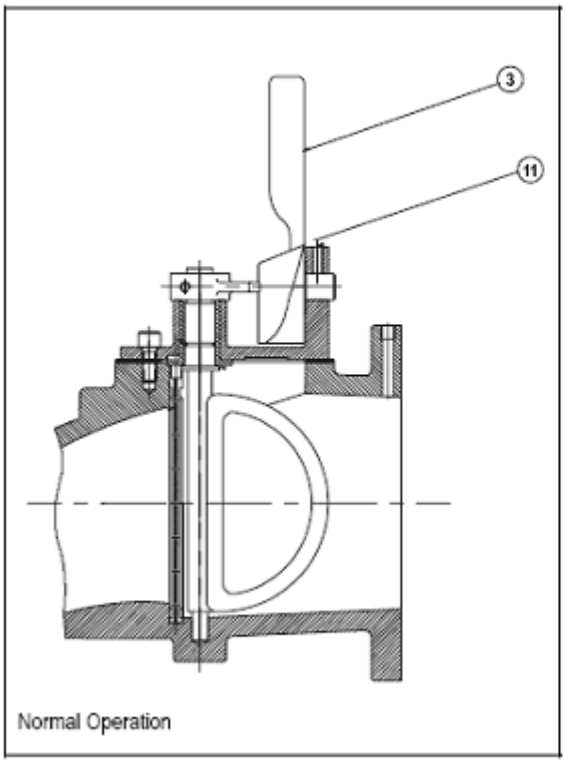

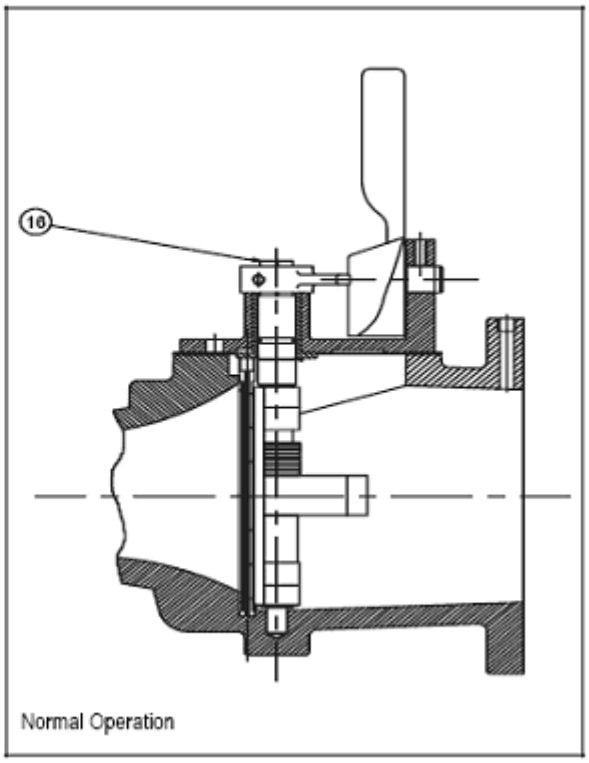

Suction Guides

Introduction

Suction Guides are designed for bolting directly onto the suction flange of horizontal or vertical shaft centrifugal pumps.

Operating Limits

The suction guide is designed to be a *four-function* fitting. Each Suction Guide is a 90º elbow, a Pipe Strainer and a Flow Stabilizer. It may also be used as a Reducing Elbow, should the suction piping be larger than the pump inlet.

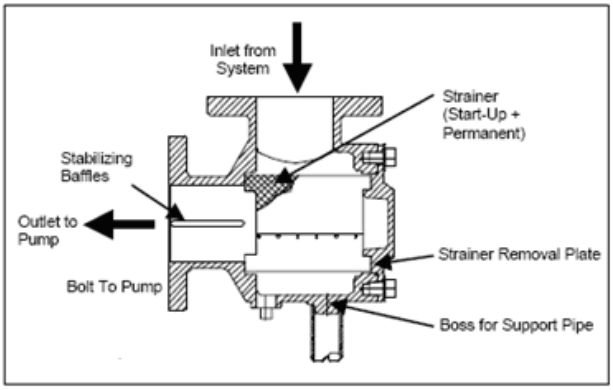

Installation

The Suction Guides may be installed in any arrangement feasible the arrangement of the pump flange bolt-holes.

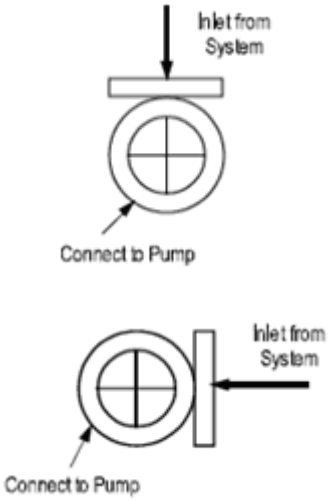

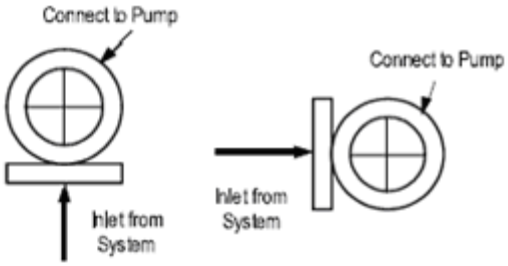

Inspection

Suction Guides are thoroughly tested and inspected before shipment to assure they meet with your order requirements. All units must be carefully examined upon arrival for possible damage during transit. Any evidence of mishandling should be reported immediately to the carrier and noted on the freight bill.

Operation

No special attention need be paid to the Suction Guide at start-up. The fitting is stationary and will strain the pumped fluid and stabilize the flow into the pump automatically.

Temporary strainer must be removed following system clean up.

After all debris has been removed from the system, or a maximum of 24 running hours, stop the pump and close the pump isolation valves. Drain the Suction Guide by removing the drain plug or opening the blowdown valve, if installed

Remove the Suction Guide cover and remove the strainer assembly from the valve body.

A temporary fine-mesh start-up strainer is tack-welded to the permanent stainless steel strainer. This temporary strainer should now be removed from the permanent strainer. The fine-mesh strainer is designed to remove small particulate from new piping systems and could easily clog with debris if left in

place. This will be detrimental to the operation of the pump.

Inspect the cover O-ring and replace if necessary.

Replace the permanent strainer into the fitting body, once the temporary strainer is removed.

Replace the cover into the body. Ensuring that the strainer is properly seated, tighten the cover bolts diagonally, evenly and firmly.

Flo-Trex Combination Valve

Introduction

The Flo-Trex combination valves are designed for installation on the discharge side of centrifugal pumps, and incorporate three functions in one valve:

1. Drip-tight shut-off valve
2. Spring closure design, Non-slam check valve
3. Flow throttling valve

Armgrip Flange Adapter Installation

1. Position the two halves of the Armgrip flange adapter on the valve body ensuring that the lugs on each half of the flange adapters are located between the anti-rotation lugs on the valve body (as shown).

Insert two bolts of specified size (Table A1) to secure the halves of the flange adapter to the valve body (as shown).

Table A1. Armgrip Flange Adapter Details				
Valve Size	125 psi/150 psi Ductile Iron Bolt		250 psi/300 psi Ductile Iron Bolt	
	No.	Size	No.	Size
2-1/2	4	5/8	8	3/4
3	4	5/8	8	3/4
4	8	5/8	8	3/4
5	8	3/4	8	3/4
6	8	3/4	12	3/4
8	8	3/4	12	7/8
10	12	7/8	16	1
12	12	7/8	16	1-1/8

The gasket cavity should face out to the adjoining flange.

2. Lubricate the inner and outer diameter of the gasket with the lubricant provided or a similar non-petroleum based water soluble grease.
3. Press the gasket firmly into the flange cavity ensuring that the sealing lip is pointed outward. When in place, the gasket should not extend beyond the end of the pipe (as shown).

4. Position the adjoining flange or the pipe to the Armgrip flange adapter and install the remaining bolts. The two locking bolts should be tightened first in order to position the flange correctly.

Note: Care should be taken to ensure that the gasket is not pinched or bent between flanges.

5. Tighten remaining nuts evenly by following bolting instructions, so that the flange faces remain parallel (as shown in the figure labeled Recommended Bolt Tightening Procedure). Flange bolts should be tightened to 70 ft-lbs torque minimum to assure firm metal to metal contact. When raised face flanges are used, there will be a gap between the faces of the outer diameter.
6. Flange gaskets are not interchangeable with other mechanical pipe couplings or flange gaskets.

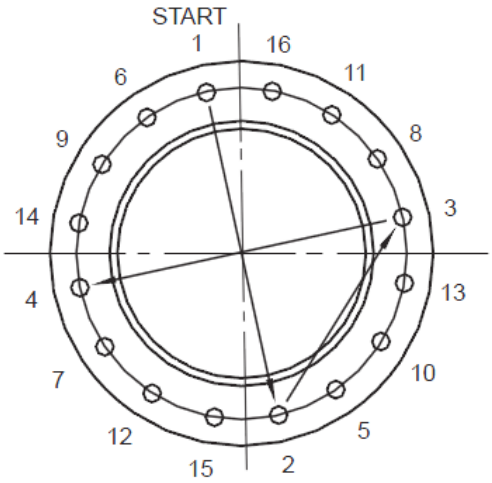

Recommended Bolt Tightening Procedure

Field Conversion (Straight to Angle Pattern Valve:

1. Open valve at least one complete turn.
2. Remove the body bolts from valve body using Allen Key
3. Rotate one half of the valve body 180° making sure the lower valve seat and O ring stay in position. Inspect the O ring for any cuts or nicks and replace if necessary.
4. Replace body bolts and torque evenly to 70 ft-lbs.

Flow Measurement with the valve in the Wide Open position

Where approximate indication of flow is acceptable the Flo-Trex valve can be used.

Step 1. Measure and record the differential pressure across the valve.

CAUTION

Safety glasses should be worn. Probes should not be left inserted into fittings for long periods of time as leakage may result.

Step 2. With valve in fully open position, locate the pressure differential on left hand side of the Flo-Trex Performance Curve with Valve in Full Open Position chart and extend line horizontally across to valve size being used. Drop line vertically down and read flow rate from bottom of chart.

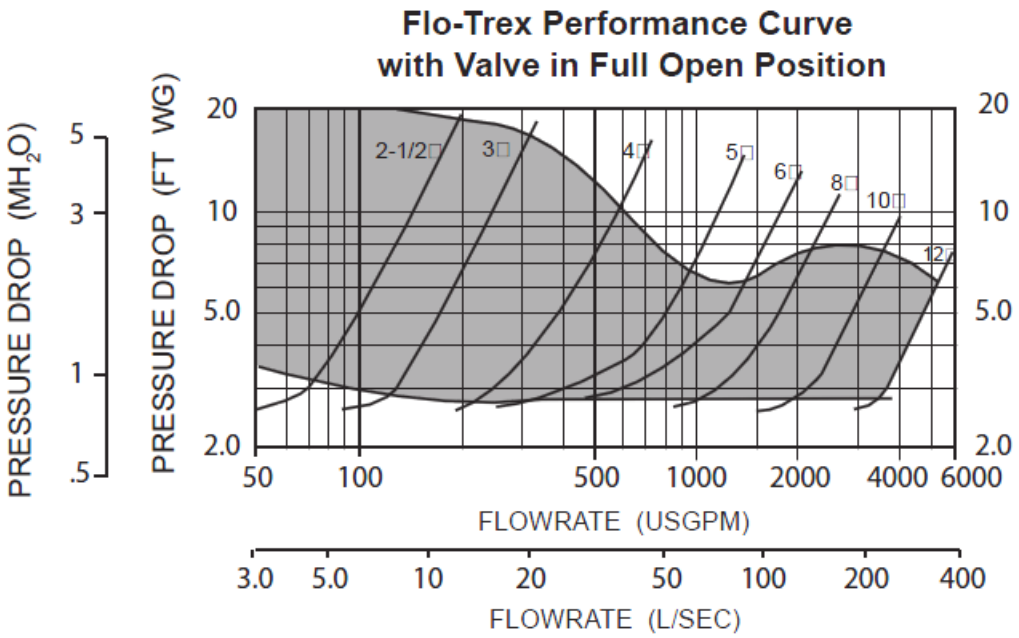

Flow Measurement with the valve in the throttled position

Step 1. The valve stem with its grooved rings and positioning sleeve indicates the throttled position of the valve.

The quarter turn graduations on the sleeve, with the scribed line on the stem provide an approximate flow measurement.

Note: The valve is shipped in closed position. The indicator on the plastic sleeve is aligned with the vertical scribed line on the stem.

Step 2. Record the size of the valve and stem position using the flow indicator scale. Calculate the percentage of valve opening based on the number of rings at the fully open position.

Valve Size	2-1/2	3	4	5	6	8	10	12
Number of Rings (valve fully open)	5	5	6	9	10	12	18	28

Step 3. Measure and record the differential pressure across the valve in the throttled position.

Step 4. Locate percentage of valve opening on the bottom scale of Inherent Flow Characteristic Curve with Valve in Throttled Position. Project line vertically up to intersect with the Valve Characteristic Curve and from this point project line horizontally across to the left of the chart and record the percentage of maximum flow rate.

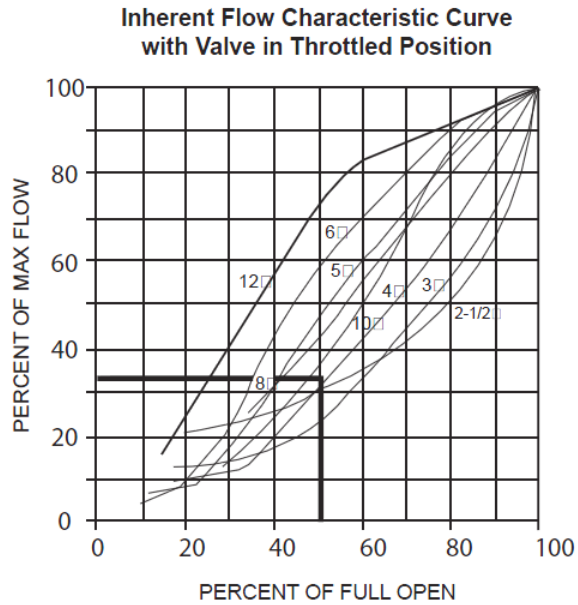

Step 5. On the Flo-Trex Performance Curve with Valve in Full Open Position locate the differential pressure obtained in Step 3 and project line horizontally across to intercept with Valve Performance Curve. Drop a line vertically down to read the flow rate at the bottom of the chart.

Step 6. Calculate the flow rate of the valve in the throttled position by multiplying the flow rate (Step 5) by the percentage of maximum flow rate (Step 4).

Example:
Valve size: 4 in.
Differential pressure is 5.4 ft
Number of open rings is 3.

From the table, the number of rings for the 4in valve fully open is 6.
Divide open rings by total, 3/6 = 50% throttled.

Example Continued:
From the Flo-Trex performance curve, a 4in. valve with 5.4 ft of pressure drop represents a flow of 400 USgpm

From the flow characteristic curve, a 4in valve at 50% open represents 34% of maximum flow.

The approximate flow of a 4in valve with a 5.4 ft pressure drop when 50% throttled is:

$$\frac{(400 \text{ x } 34)}{100} = 136 \text{ USgpm}$$

$$\frac{(25.2 \text{ x } 34)}{100} = 8.57 \text{ L/s}$$

Note: To prevent premature valve failure it is not recommended that the valve operate in the throttled position with more than 25 ft pressure differential. Instead the pump impeller should be trimmed or valves located elsewhere in the system to partially throttle the flow.

Operation

To assure tight shut-off, the valve must be closed using a wrench with 25 to 30 ft-lbs of torque.

To assure trouble free check valve operation and shut-off operation, the valve should be periodically opened and closed to keep valve seat and valve disc guide stem free of buildup of system contaminants.

Repacking of Flo-Trex valve under full system pressure

If it is necessary, the stem O ring can be changed under full system pressure.

⚠ CAUTION

Safety glasses should be worn.

Step 1. Record the valve setting.

Step 2. Turn the valve stem counterclockwise until the valve is fully open and will not turn any further. Torque to a maximum of 45 ft-lbs. This will ensure good metal to metal contact and minimal leakage.

Step 3. The valve bonnet may now be removed. There may be a slight leakage, as the metal to metal backseating does not provide a drip-tight seal.

Step 4. Clean exposed portion of valve stem being careful not to leave scratches.

Step 5. Remove and replace the O ring gasket.

Step 6. Install the valve bonnet.

Step 7. Tightening the valve bonnet is necessary to stop any leaks.

Step 8. Open valve to balance set point as recorded in Step 1.

Note: On valve sizes of 2-1/2 inch and 3 inch, the full open position is 5 turns, though the valve will open to 5-1/2 turns which is just back of seating of valve.

Seat Replacement

Step 1. Drain the system and remove valve from piping.

Step 2. Remove the body bolts from the body using an Allen Key.

Step 3. Remove seat and O Ring. O rings are not used on valves of 8 inches or larger.

Step 4. Inspect and clean O ring cavity and install new O ring and seat. Valve disc stem should be inspected and replaced if worn. Valve stem O ring should be replaced at this time as discussed under Repacking of Flo-Trex section.

Pressure-Temperature Limits

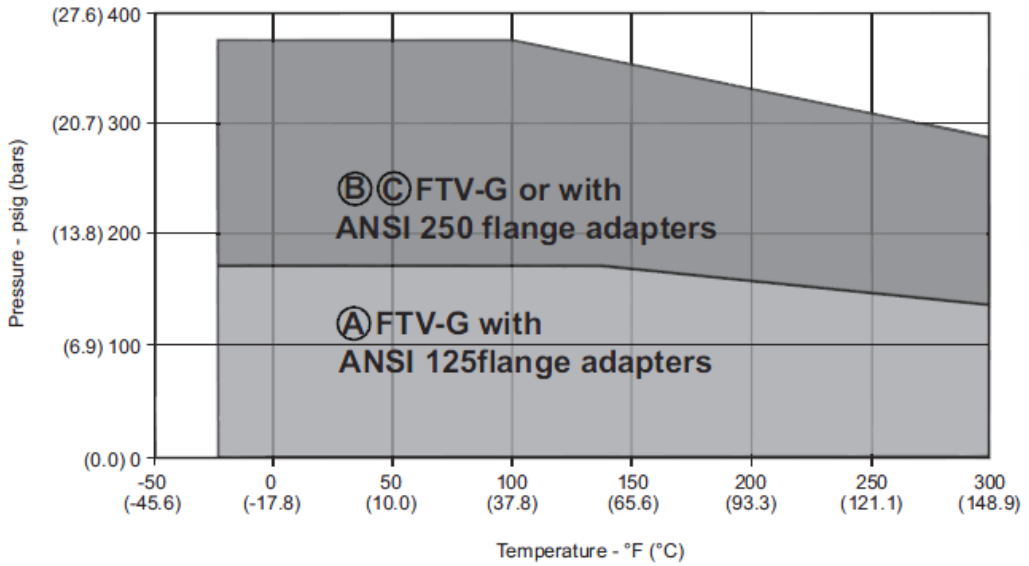

Ⓐ Armgrip ductile iron flange adapters for ANSI 150# flanges
Ⓑ Armgrip ductile iron flange adapters for ANSI 300# flanges
Ⓒ Grooved end with 375 p.s.i. rated pipe coupling

Flo-Trex Cross Section

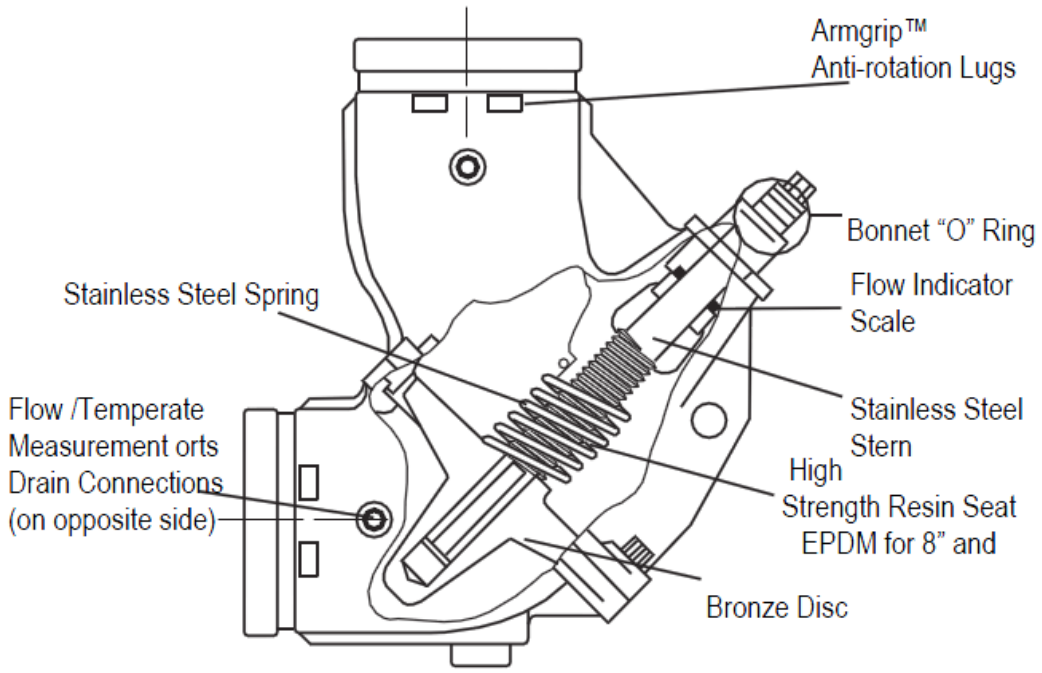

LN Series Startup Form

Job Name:_____ Date:_____

Address:_____

_____

Model Number:_____

Serial Number:_____ Tag:_____

Startup Contractor:_____

Address:_____

_____ Phone:_____

Pre Startup Checklist

Installing contractor should verify the following items.	
1. Is there any visible shipping damage?	☐Yes ☐No
2. Is the unit level?	☐Yes ☐No
3. Are the unit clearances adequate for service and operation?	☐Yes ☐No
4. Do all access doors open freely and are the handles operational?	☐Yes ☐No
5. Have all shipping braces been removed?	☐Yes ☐No
6. Have all electrical connections been tested for tightness?	☐Yes ☐No
7. Does the electrical service correspond to the unit nameplate?	☐Yes ☐No
8. On 208/230V units, has transformer tap been checked?	☐Yes ☐No
9. Has overcurrent protection been installed to match the unit nameplate requirement?	☐Yes ☐No
10. Have all set screws on the fans been tightened?	☐Yes ☐No
11. Do all fans rotate freely?	☐Yes ☐No
12. Does the field water piping to the unit appear to be correct per design parameters?	☐Yes ☐No

Ambient Temperature

Ambient Dry Bulb Temperature _____°F Ambient Wet Bulb Temperature _____°F

Water/Glycol System

1. Has the entire system been flushed and pressure checked?	☐Yes ☐No
2. Have isolation valves to the chiller been installed?	☐Yes ☐No
3. Has the entire system been filled with fluid?	☐Yes ☐No
4. Has air been bled from the heat exchangers and piping?	☐Yes ☐No
5. Is there a minimum load of 50% of the design load?	☐Yes ☐No
6. Has the water piping been insulated?	☐Yes ☐No
7. Is the glycol the proper type and concentration (N/A if water)?	☐Yes ☐No

8. What is the freeze point of the glycol (N/A if water)?
_____

Chiller Configuration

Air-Cooled Chiller ☐

Low Ambient Control ☐ Condenser Safety Check ☐

No Water Leaks ☐ Water Flow _____ gpm

Chilled Water In Temperature _____°F Chilled Water Out Temperature _____°F

Compressors/DX Cooling

Check Rotation ☐

Number	Model #	L1	L2	L3	Head Pressure PSIG	Suction Pressure PSIG	Crankcase Heater Amps
1							
2							
3							
4							

Refrigeration System 1 - Cooling Mode

	Pressure	Saturated Temperature	Line Temperature	Sub-cooling	Superheat
Discharge				N/A	N/A
Suction				N/A	
Liquid					N/A

Refrigeration System 2 - Cooling Mode

	Pressure	Saturated Temperature	Line Temperature	Sub-cooling	Superheat
Discharge				N/A	N/A
Suction				N/A	
Liquid					N/A

Condenser Fans

Alignment ☐		Check Rotation ☐		Nameplate Amps_____
Number	hp	L1	L2	L3
1				
2				
3				
4				
5				
6				
7				
8				

Pumping Package

	hp	L1	L2	L3	Flow (gpm)
Chiller Building Pump #1					
Chiller Building Pump #2					

Maintenance Log

This log must be kept with the unit. It is the responsibility of the owner and/or maintenance/service contractor to document any service, repair or adjustments. AAON Service and Warranty Departments are available to advise and provide phone help for proper operation and replacement parts. The responsibility for proper start-up, maintenance and servicing of the equipment falls to the owner and qualified licensed technician.

Entry Date	Action Taken	Name/Tel.

Literature Change History

February 2014
Initial version.

July 2014
Corrected tonnages for the figures of the lifting details.

January 2015
Updated cover picture and Feature 17-H minimum operation temperature.

July 2015
Updated *Microchannel Coil Cleaning* section. Updated Flo-Trex images. Added *Features and Options Information.*

August 2016
Changed coil cleaning pressure to 100 psig.

October 2017
Added picture to show the open base. Added phase imbalance discussion. Added frequency ranges for VFD compressors. Changed the minimum compressor cycling times to 3 minutes. Added suction line filter removal instructions.

May 2018
Updated technical support contact information.

June 2018
Updated E-coated coil cleaning procedure. Updated Flo-Trex Combination Valve section. Minor Revision changed to "A" because LN is now AHRI certified.

March 2019
Added ECM Low Sound Condenser Fan Head Pressure Control option.

May 2019
Added the minimum/maximum voltage range table in the Electrical section.

AAON
2425 South Yukon Ave.
Tulsa, OK 74107-2728
www.AAON.com

LN Series
Installation, Operation, & Maintenance
V28980 · Rev. B · 190515

Factory Technical Support: 918-382-6450

Note: Before calling Technical Support, please have the model and serial number of the unit available.

Parts: For replacement parts, please contact your local AAON Representative.